LCECPU

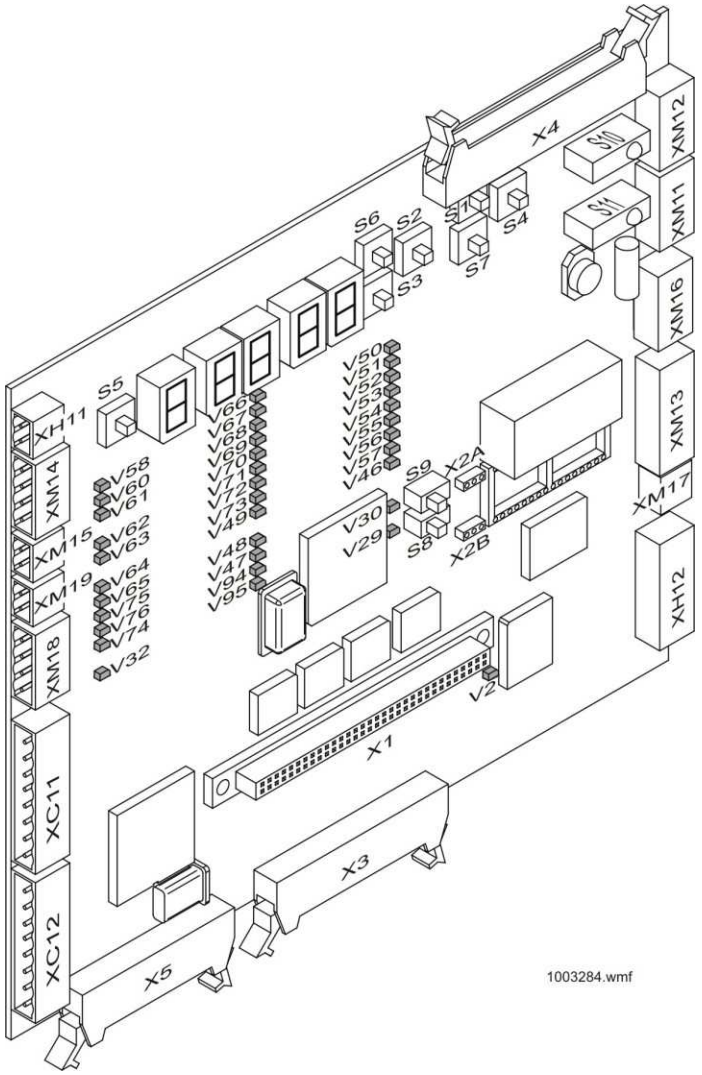
X4
S10
S11
XM12
XM11
XM16
XM13
XM17
XH12
S6
S2
S1
S4
S7
S3
S5
XH11
XM14
XM15
XM19
XM18
XC11
XC12
V50
V51
V52
V53
V54
V55
V56
V57
V46
V58
V60
V61
V62
V63
V64
V65
V75
V76
V74
V32
V66
V67
V68
V69
V70
V71
V72
V73
V49
V48
V47
V94
V95
V30
V29
S9
S8
X2A
X2B
V2
X1
X3
X5
1003284.wmf

LEDs

Pos.	Name	Colour	ON	OFF	Notes
V2	Fault	Red	Software error.	The software is running.	
V29	Inhibit landing calls	Yellow	Landing calls are inhibited.	Landing calls are permitted.	Done with switch S8
V30	Inhibit door opening	Yellow	Door opening is inhibited.	Door opening is permitted.	Done with switch S9.
V32	Change doard	Red	The board is faulty.	The board is OK.	
V46	Drive down	Yellow	Drive down command has been given to the drive.	Drive command is not active.	
V47	Photocell	Yellow	Photocell beam is cut.	Photocell beam is not cut.	
V48	Open door command	Yellow	Open door command inside the car is active.	The command in not active.	From LCE™ to AMD
V49	Safety input	Green	Safety chain is OK up until the car door contact.	Safety chain is open before the car door contact.	
V50	Drive up	Yellow	Drive up command has been given to the drive.	Drive command is not active	
V51	77:U	Yellow	Car is at the top deceleration area.	Car is not at the top deceleration area.	77:U open.
V52	61:U	Yellow	Car is in 61:U area.	Car is out of 61:U area.	
V53	30	Yellow	Car is in door zone.	Car is out of door zone.	
V54	B30	Yellow	Car is in B-side door zone.	Car is out of B-side door zone.	
V55	61:N	Yellow	Car is in 61:N area.	Car is out of 61:N area.	

LEDs

Pos.	Name	Colour	ON	OFF	Notes
V56	77:N	Yellow	Car is the bottom deceleration area.	Car is not at the bottom deceleration area.	77:N open.
V57	77:S	Yellow	Synchronisation switch is active.	Synchronisation switch is not active.	Needed only in short floor distance case at terminal floor.
V58	Emergency alarm	Red	Alarm has been given.		
V60	Lift in fault	Red	A fault prevents the normal operation.	The elevator operates in the normal mode.	
V61	Special mode	Yellow	Special mode is active.	The elevator operates in the normal mode.	
V62	Inspection	Yellow	42:DS switch in position inspection drive.	42:DS switch in position normal drive.	
V63	Rescue drive	Yellow	RDF switch in ReCall Drive position.	RDF switch in normal drive position.	
V64	Car communication OK	Green	The car communication network is working.	The car communication network is not working.	If the LED is OFF, check the connections.
V65	Hoistway communication OK	Green	The shaft communication network is working.	The shaft communication network is not working.	If the LED is OFF, check the landing boards and LCECPU connections.
V66	Normal speed	Green	Normal speed.		
V67	Start permit	Yellow	Both main contactors are activated.	Both main contactors are released.	
V68	Main contactor	Yellow	Main contactor activation command is valid from LCECPU.	The activation command is not valid.	

LEDs

Pos.	Name	Colour	ON	OFF	Notes
V69	Shaft door contact	Yellow	All landing doors are closed.	Landing door is open.	
V70	Car door contact	Yellow	Car door is closed.	Car door is open.	
V71	Close door command	Yellow	Close door command is active.	Close door command is not active.	From LCE™ to AMD.
V72	Drive need	Yellow	The controller has recognised a need for drive.	There is no need for drive.	Car calls, parking drive, correction drive and so on.
V73	V3F OK	Green	Drive module is ready to run.	Problems with drive module.	
V74	+24V car and shaft OK	Green	+24V power supply for car and shaft is OK.	+24V power supply is missing.	
V75	+24V controller OK	Green	+24V power supply for controller is OK.	+24V power supply is missing	
V76	+5V controller OK	Green	+5V power supply for LCECPU is OK.	+5V power supply is missing.	
V94	Open button	Yellow	Open door button inside the car is active.	The button is not active.	
V95	Close force limiter	Yellow	Close force limiter asks to reopen the door.	There is no need to reopen the door.	

Switches and jumpers

Switch	Description
S1	Up call.
S2	Select/accept button.
S3	Decrease value.
S4	Car call.
S5	Menu selections.
S6	Increase value.
S7	Down call.
S8	Inhibit landing calls.
S9	Inhibit door opening.
S10	Overspeed governor test.
S11	Buffer test.

Connectors

Plug	Description
X1	Optional board interface to LCECAN or LCEKNX.
X2A	Paradigm debugger interface.
X2B	
X3	To the LCE230 board.
X4	To the motor control board.
X5	Expansion I/O interface (only in G02).
XC11	Car positioning signals.
XC12	Serial network and alarm signals.
XH11	To alarm bell.
XH12	To LON network.
XM11	To emergency return drive, RDF.
XM12	To OSG trip/return motor.
XM13	To optional LON I/O boards.
XM14	Indication interface.
XM15	Battery.
XM16	Power supply unit.
XM17	Power supply unit.
XM18	Intercom interface.
XM19	To door zone indication lamp.

LOPCB

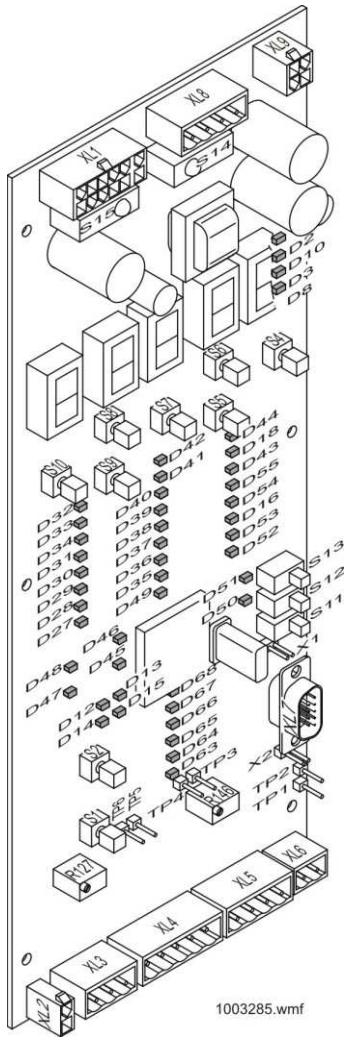
XL1
XL2
XL3
XL4
XL5
S14
S15
S13
S12
S11
X1
X2
TP1
TP2
TP3
TP4
1003285.wmf

LEDs

Pos.	Name	Colour	ON	OFF	Notes
D2	+24V OK	Green	+24V power supply for controller is OK.	+24V power supply is missing.	If the LED is OFF, check the fuse F4.
D10	+5V OK	Green	+5V power supply for LCECPU is OK.	+5V power supply is missing.	If +24V OK LED is also ON, change the LCECPU board.
D3	+12V OK	Green	+12V power supply for controller is OK.	+12V power supply is missing.	
D8	-12V OK	Green	-12V power supply for controller is OK.	-12V power supply is missing.	

LEDs

Pos.	Name	Colour	ON	OFF	Notes
D32	LCECPU running	Green	CPU is running.	CPU is not running.	CPU is running when the LED blinks.
D33	Lift in fault	Red	A fault prevents normal operation.	The elevator operates in normal mode.	
D34	Emergency alarm	Red	Alarm given.	Alarm is not given.	Reset by pressing select/accept button.
D31	Inspection	Yellow	42:DS switch is in position inspection drive.	42:DS switch is in position normal drive.	
D30	Rescue drive	Yellow	RDF switch in position ReCall Drive.	RDF switch in position normal drive.	
D29	Car comm. OK	Green	The car communication network is working.	The car communication network is not working.	If the LED is OFF, check the connections.
D28	Hoistway comm. OK	Green	The shaft communication network is working.	The shaft communication network is not working.	If the LED is OFF, check the landing boards and LCECPU connections.
D27	+24V car & shaft OK	Green	+24V power supply for car and shaft is OK.	+24V power supply is missing.	

LEDs

Pos.	Name	Colour	ON	OFF	Notes
D42	Speed > 0.1 m/s	Yellow	In acceleration, speed > 0.1 m/s.	In deceleration, speed < 0.3 m/s.	
D41	Start permit	Yellow	Both main contactors are activated.	Both main contactors are released.	
D40	Main contactor	Yellow	Main contactor activation command is valid from LCECPU.	The activation command is not valid.	
D39	Shaft door contact	Yellow	All landing doors are closed.	Landing door is open.	
D38	Car door contact	Yellow	Car door is closed.	Car door is open.	
D37	Close door command	Yellow	Close door command is active.	Close door command is not active.	From LCE™ to AMD.
D36	Drive need		The controller has recognized a need for drive.	No need for drive.	Calls, parking drive, correction drive, and so on.
D35	V3F OK	Green	Drive module is ready to run.	Problems with drive module.	
D49	Safety input	Green	Safety chain is OK until the car door contact.	Safety chain is open before the car door contact.	

LEDs

Pos.	Name	Colour	ON	OFF	Notes
D44	Drive up	Yellow	Drive up command has been given to the drive.	Drive command is not active.	
D18	77:U	Yellow	Car is at the top deceleration area.	Car is not at the top deceleration area.	77:U open.
D43	61:U	Yellow	Car is in 61:U area.	Car is out of 61:U area.	
D56	30	Yellow	Car is in door zone.	Car is out of door zone.	
D55	B30	Yellow	Car is in B-side door zone.	Car is out of B-side door zone.	
D54	61:N	Yellow	Car is in 61:N area.	Car is out of 61:N area.	
D16	77:N	Yellow	Car is at the bottom deceleration area.	Car is not at the bottom deceleration area.	77:N open.
D63	77:S	Yellow	Synchronisation switch is active.	Synchronisation switch is not active.	Is needed only in short floor case at terminal floor.
D62	Drive down	Yellow	Drive down command has been given to the drive.	Drive command is not active.	

LEDs

Pos.	Name	Colour	ON	OFF	Notes
D48	Open door command	Yellow	Open door command inside car is active.	The command is not active.	From LCE™ to AMD.
D46	Open button	Yellow	Open door button inside the car is active.	The button is not active.	
D47	Photocell	Yellow	Photocell beam is cut.	Photocell beam is not cut.	
D45	Close force limiter	Yellow	Close force limiter asks to reopen the door.	There is no need to reopen the door.	
D51	Inhibit door opening.	Yellow	Door opening is inhibited.		Done with switch S13.
D52	Inhibit landing calls	Yellow	Landing calls are inhibited.		Done with switch S12.
D12	Door zone indicator LEDs.	Yellow	The elevator car is in door zone.	The elevator car is not in the door zone.	These LEDs operate with the power from the emergency battery.
D13					
D14					
D15					

LEDs

Pos.	Name	Colour	ON	OFF	Notes
D68	Speed > 0.6 m/s	Red	Car speed is more than 0.6 m/s, upward.		Upward direction.
D67	Speed > 0.3 m/s	Green	Car speed is more than 0.3 m/s, upward.		Upward direction.
D66	Speed > 0.02 m/s	Red	Car speed is more than 0.02 m/s, upward.		Upward direction
D65	Speed < -0.02 m/s	Green	Car speed is more than 0.02 m/s, downward.		Downward direction.
D64	Speed < -0.3 m/s	Green	Car speed is more than 0.3 m/s, downward.		Downward direction.
D63	Speed < -0.6 m/s	Red	Car speed is more than 0.6 m/s, downward.		Downward direction.

Switches and jumpers

Switch	Description
S1	RDF down.
S2	RDF up.
S4	Car call.
S5	Down call.
S6	Up call.
S7	Select/accept button.
S8	Decrease value.
S9	Increase value.
S10	Menu.
S11	User interface or serial connection for pc is in use.
S12	Inhibit landing calls.
S13	Inhibit door opening.
S14	Over speed governor test.
S15	Buffer test.

Connectors

Plug	Description
XL1	From LCECPUnc.
XL2	From LOP switch, rescue drive switch.
XL3	From LWD sensor, inductive load weighing sensor in the car.
XL4	From LWD sensor, load weighing sensor in the shaft.
XL5	From V3F16/18, drive interface.
XL6	From V3F16/18, tachometer
XLH	To PC, RS232 connection.
XL8	To OSG test.
XL9	To intercom.

LOP230

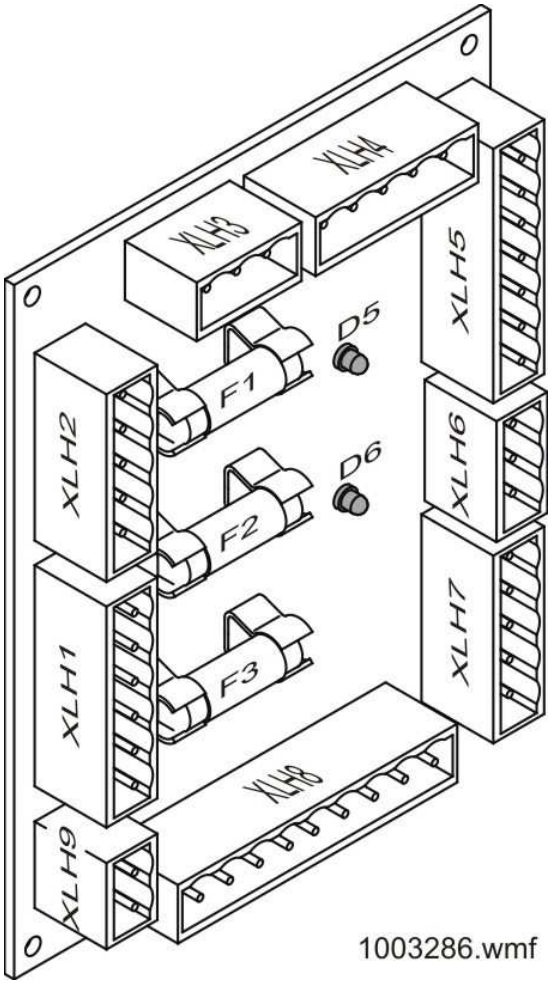
XLH4
XLH3
XLH5
D5
F1
XLH2
XLH6
D6
F2
XLH7
F3
XLH1
XLH8
XLH9
1003286.wmf

Fuses

Fuse	Size	Description
F1	250 V, 1 A	Safety chain voltage.
F2	250 V, 2 A / 6.3 A	Safety chain, brake and fan supply.
F3	250 V, 2 A	Door supply.

LEDs

Pos.	Name	Colour	ON	OFF	Notes
D5	Fan, brake and safety chain supply OK.	Green	Fuse F2 is OK.	The fuse is broken or the 230V between XLH1/1 and XLH1/2 is missing.	
D6	Door supply OK	Green	Fuse F3 is OK.	The fuse is broken or the 230V between XLH1/4 and XLH1/5 is missing.	

Connectors

Plug	Description
XLH1	From LCEREC, 230VAC power supply.
XLH2	From LOP230, door and brake power supply.
XLH3	From 14, stop button in the motor.
XLH4	From 112, stop switch in the pit.
XLH5	From 270, recall drive.
XLH6	From 127, overspeed governor safety switch.
XLH7	From 121, shaft door contact.
XLH8	From LOP230, safety chain connection.
XLH9	From LOP230, fan supply (V3F18).

LCEKNX

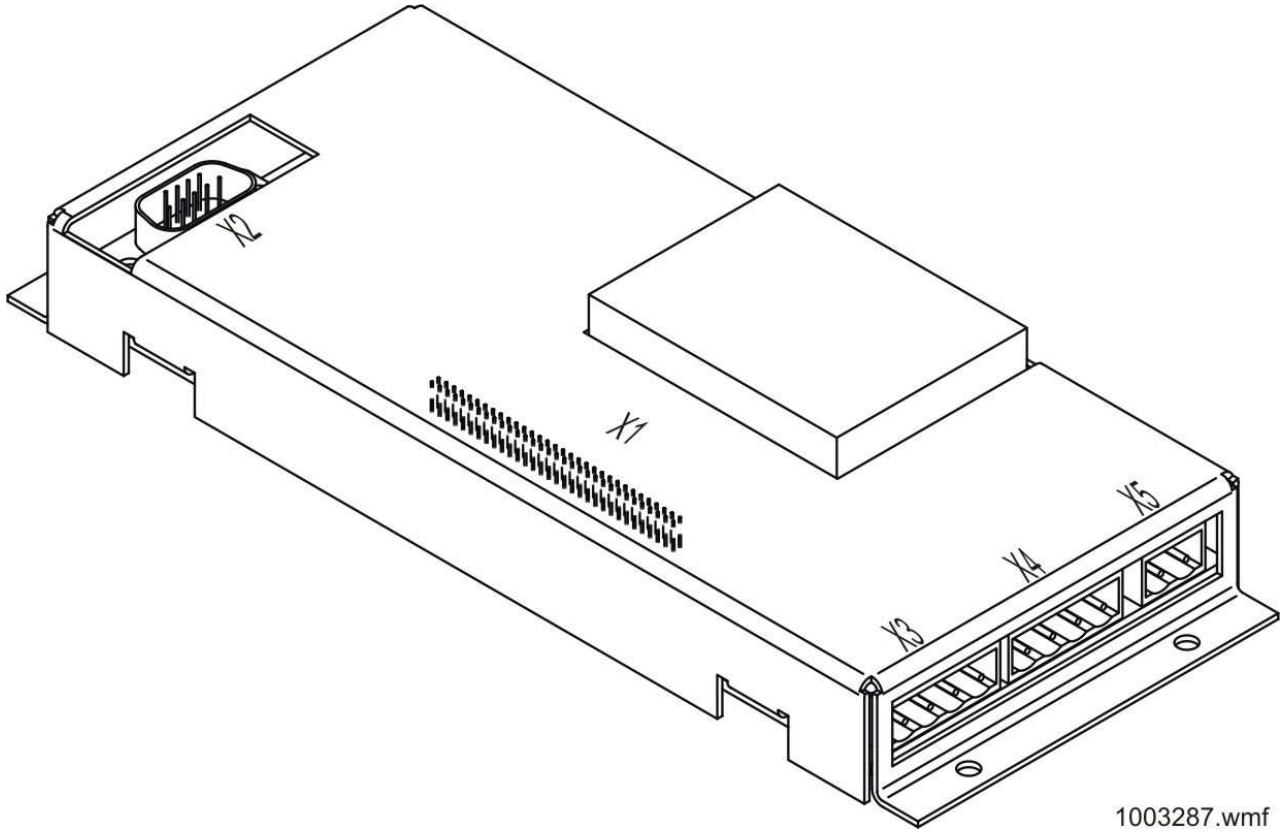

General of LCEKNX (713130G01)

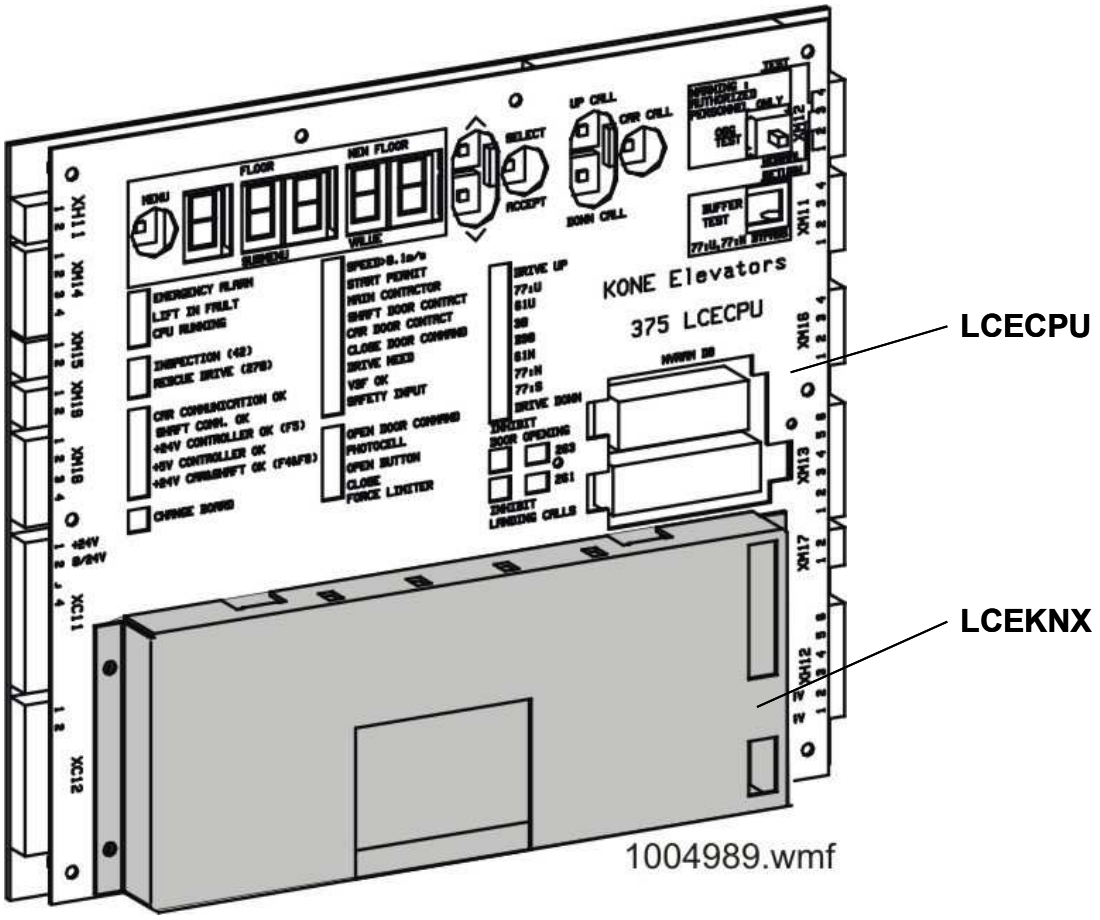

Connectors

Plug	Description
X1	To the LCECPU board.
X2	To PC.
X3	From the base unit or previous car interface/elevator unit.
X4	To the next car interface/elevator unit.
X5	To KoneXion car interface.

Descriptions of the LCEADJ and LCEVOI boards

Board	VoiceLink	Modem	HW lock can be opened	Notes
LCEKNX	X	X	X	Is installed when the elevator is maintained by KONE.
LCEADJ	X		X	
LCEVOI	X			Default board.

KNXRIF

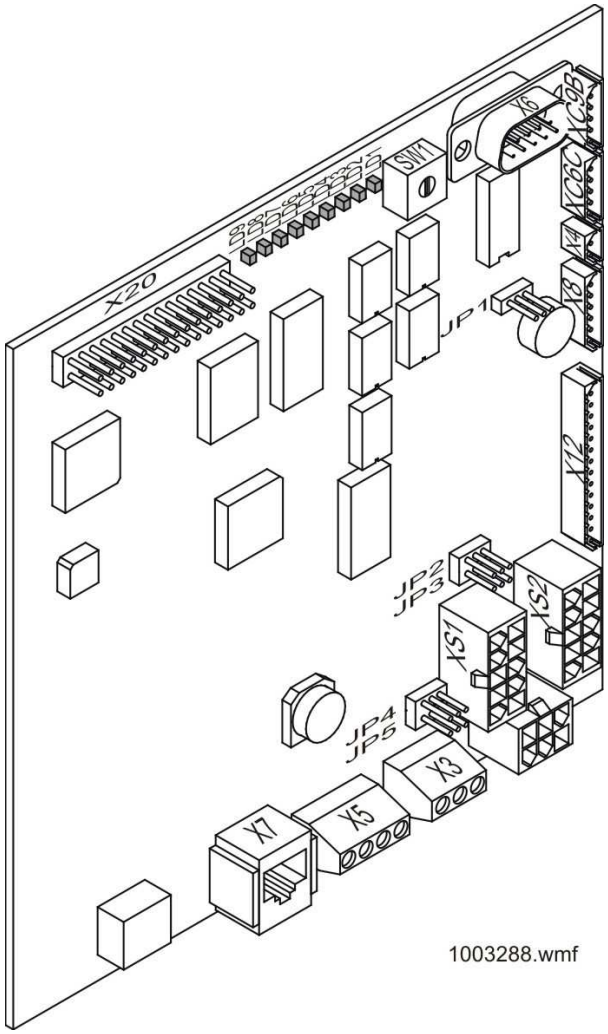
X20
SW1
X6
XC9B
XC6C
X4
X8
JP1
X12
JP2
JP3
XS2
XS1
JP4
JP5
X3
X7
X5
1003288.wmf

LEDs

Pos.	Name	Colour	ON	OFF	Notes
LD1	Mains	Green	Main power is ON.	Main power is missing.	The LEDs blinks if the main power is missing and the battery is used as a main supply.
LD2	Batt	Red	Battery voltage is too low, battery is missing or the battery fuse is blown.	Battery is OK.	LED is ON if the voltage is below 10,5 V.
LD3	Alarm	Yellow	0.5 sec ON / 0.5 sec OFF: Alarm is registered, but not served. 0.3 sec ON / 0.3 sec OFF: No configuration or wrong configuration. 2 sec ON / 2 sec OFF: No configuration or wrong configuration. 2 sec ON / 1 sec OFF: Configuration download. Constantly ON: Alarm is active and served	No alarms, no configuration in the board.	If the LED is constantly ON, voice call is ongoing or sent/received.
LD4	Call	Yellow	Telephone line is OFF hook.	Telephone line is not ON hook.	
LD5	PSTN fail	Red	Telephone line is missing.	Telephone line is OK.	

LEDs

Pos.	Name	Colour	ON	OFF	Notes
LD6	LON fail	Red	0.3 sec ON / 0.3 sec OFF: Escalator RS link failure. Blinks with the same frequency as LD3: A non-configured alalyser is connected to the board. Constanly ON: LON communication failure.	LON is OK	
LD7	ICT	Red	Internal error in the board. Replace the board.	The board is OK.	LED is ON after a power up until the program initialisation is done.
LD8	-	Green	-	-	Not used
LD9	-	Green	-	-	Not used
LD10	LON CPU reset	Green	Blinks when the host CPU does not communicate with LON CPU on the board. The board has internal failure or no software.		Controlled by the LON-controller of the host CPU.

Switches and jumpers

Jumper	Pos.	Description
JP1 (MIC)	1-2	External microphone in use.
	2-3	Internal microphone in use. (Default)
JP2 (Polarize LON network)	1-2	Connects a pull-up resistor to LON_A cable.
	2-3	Disconnects the pull-up resistor.
JP3 (Polarize LON network)	1-2	Connects a pull-up resistor to LON_B cable.
	2-3	Disconnects the pull-up resistor.
JP4 (INTERCOM_MIC)	1-2	Disconnects a signal INTERCOM_MIC from LCECCB/LCECOB (XS1/XS2:9).
	2-3	Connects a signal INTERCOM_MIC to LCECCB/LCECOB (XS1/XS2:9).
JP5 (INTERCOM_SPEAKER)	1-2	Disconnects a signal INTERCOM_SPEAKER from LCECCB/LCECOB (XS1/XS2:9).
	2-3	Connects a signal INTERCOM_SPEAKER to LCECCB/LCECOB (XS1/XS2:9).
SW1	-	Elevator number selection.

Connectors

Plug	Description
X3	Stopping accuracy detector.
X4	Car lightning detector.
X5	Inductive loop antenna.
X6	Data communications for modem.
X7	PSTN (modem connection).
X8	External modem interface.
X12	Voice and alarm interface.
X16	Power supply.
X20	GSM module interface.
XC9C	Car bottom alarm electrics.
XC9B	Car top alarm electrics.
XS1	Cross connection board.
XS2	Car operating board.

LCECAN

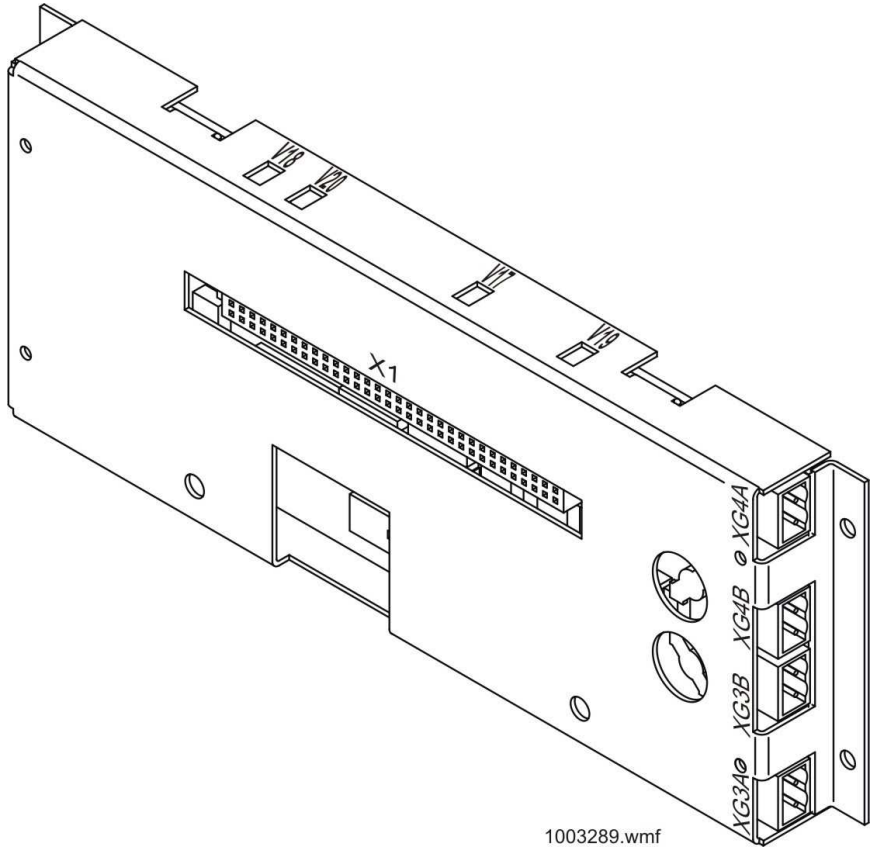

LEDs

Pos.	Name	Colour	ON	OFF	Notes
V17	CM-NET	Yellow	Group is connected.		
V18	Change board	Red	The board is faulty.		
V19	EXT-NET	Yellow	EMC or Elevision is connected.		
V20	CPU running	Green	CPU is working.		

Connectors

Plug	Description
X1	Main board connector to LCECPU.
XG3A	Connections to the other elevators in the group (CM-NET)
XG3B	
XG4A	Connections to EMC, Elevision or E-link (EXT-NET).
XG4B	

Different versions

Board version	EPROM	SRAM	Description
LCECAN G01	256 k	128 k	Standard version, used in KONE MonoSpace® and KONE MiniSpace™.
LCECAN G02	256 k	128 k	Used in KONE ReSolve, KONE MonoSpace® Special and KONE MonoSpace® 2.0. Possibility to have 8 elevators in group.
LCECAN G03	256 / 512 k	512 k	Used with I-Link and PC-group.

LCE230

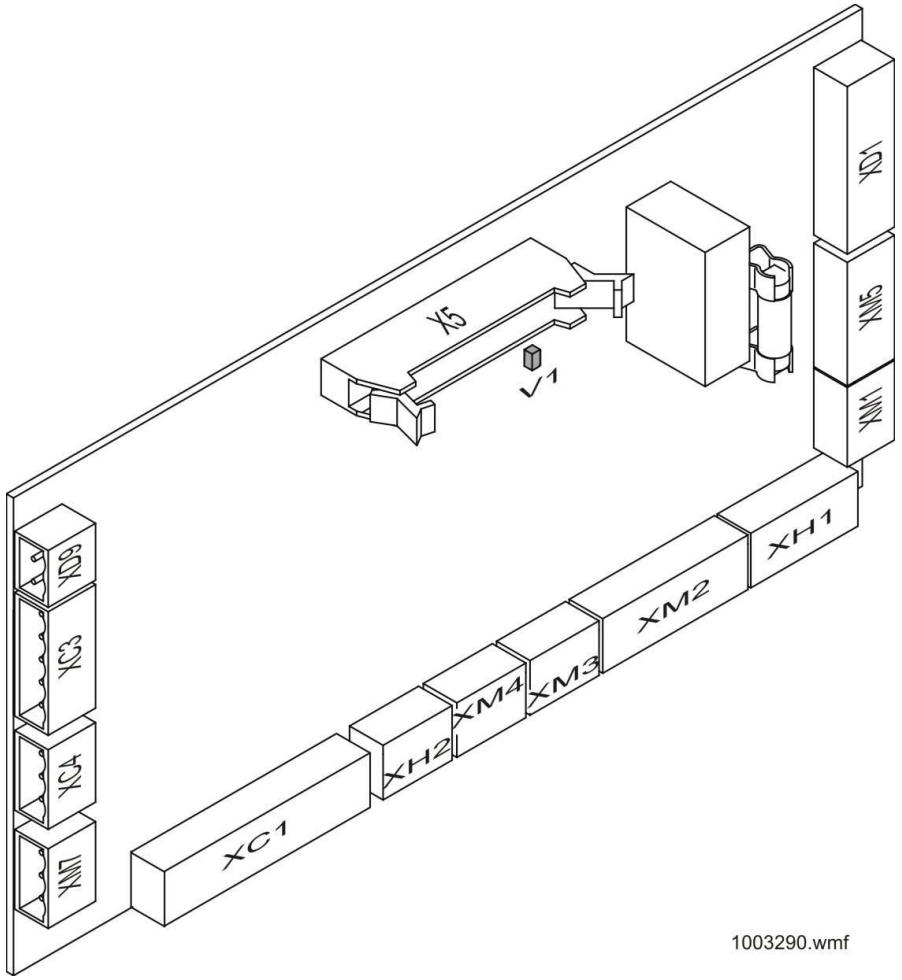
X5
V1
XD1
XM5
XM1
XH1
XM2
XM3
XM4
XH2
XC1
XM7
XC4
XC3
XD6
1003290.wmf

Fuses

Fuse	Size	Description
F1	230 V, 1 A	Fuse for the safety chain.

LEDs

Pos.	Name	Colour	ON	OFF	Notes
V1	Main contactor enable	Yellow	Main contactor is energised	Main contactor is de-energised	

Connectors

Plug	Description
X5	To the LCECPU board.
XC1	Car safety.
XC3	Door supply and spare wire to car.
XC4	Car light supply.
XD1	To drive unit's contactor block.
XH1	To pit stop switch.
XH2	To landing door lock contacts.
XM1	To machinery stop button.
XM2	To switch and fuse module RDF buttons.
XM3	To overspeed governor's safety contact.
XM4	To counterweight safety contact.
XM5	230 VAC power from transformer.
XM7	From car light switch and fuse.
XM9	Spare wire terminal.

LCEADO

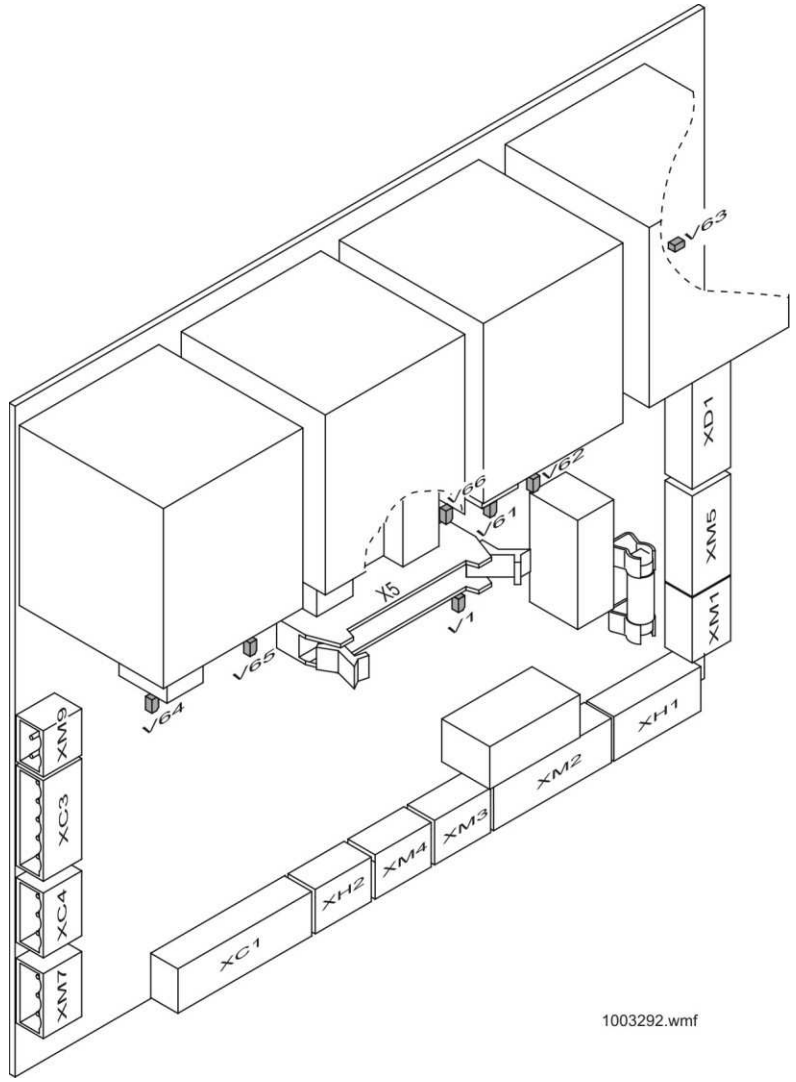
V63
XD1
XM5
XM1
V66
V62
V61
X5
V1
V65
V64
XH1
XM2
XM3
XM4
XH2
XC1
XM9
XC3
XC4
XM7
1003292.wmf

Fuses

Fuse	Size	Description
F1	230 V, 1 A	Safety chain voltage.

LEDs

Pos.	Name	Colour	ON	OFF	Notes
V1	Main contactor enable	Yellow	Main contactor is energised	Main contactor is de-energised	
V61	ADO permit	Yellow	Door zone 1, door zone 2 and ADO/ACL speed signals have gone OFF while elevator is accelerating.		Contactor K487 is energised when LED is lit.
V62	ADO allowed	Yellow	Door zone 1, door zone 2 and ADO/ACL speed signals have come ON while elevator is decelerating.		Contactors K486, K443:1 and K443:2 are energised. K487 is de-energised.
V63	Enable ADO/ACL	Yellow	Elevator is doing Advanced door opening or relevelling with doors open.		Relay K553 is energised.
V64	ADO/ACL speed	Yellow	Speed is over 0.1 m/s while accelerating.		
V65	Door zone 1	Yellow	Elevator is in door zone area 1 (30 or B30).		
V66	Door zone 2	Yellow	Elevator is in door zone area 2 (61:U/N).		

Connectors

Plug	Description
X5	To the LCECPU board.
XC1	Car safety.
XC3	Door supply and spare wire to car.
XC4	Car light supply.
XD1	To drive unit's contactor block.
XH1	To pit stop switch.
XH2	To landing door lock contacts.
XM1	To machinery stop button.
XM2	To switch and fuse module RDF buttons.
XM3	To overspeed governor's safety contact.
XM4	To counterweight safety contact.
XM5	230 VAC power from transformer.
XM7	From car light switch and fuse.
XM9	Spare wires terminal.

Functional description

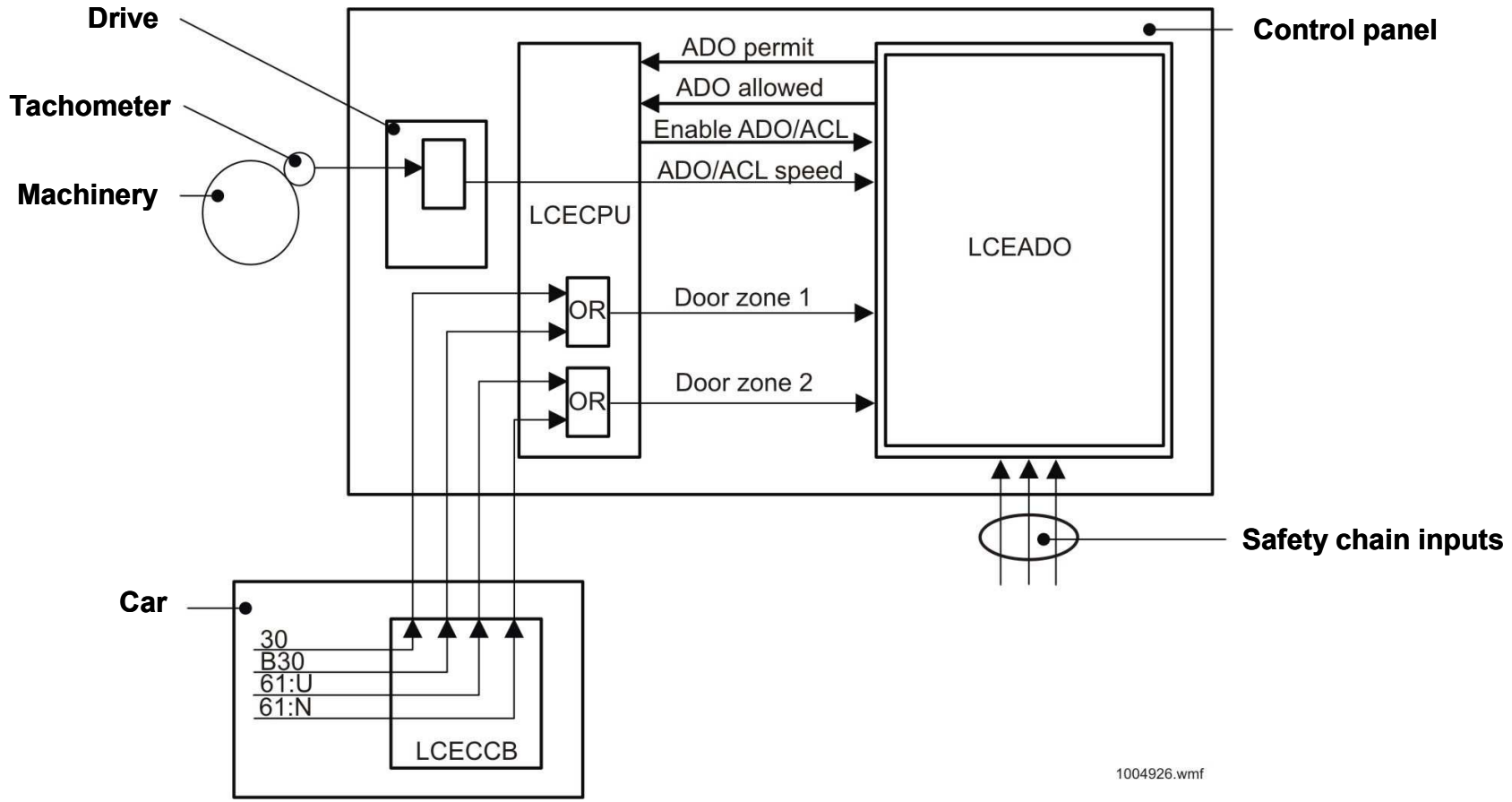

Description of the LCEADON board

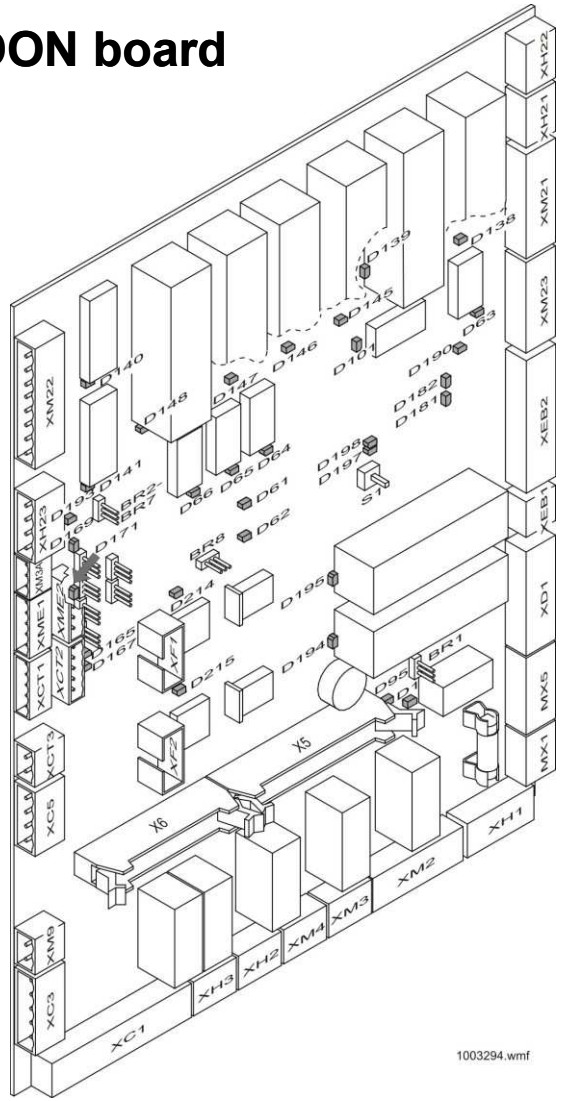

Fuses

Fuse	Size	Description
F1	250 V, 1 A	Safety chain voltage.
F2	60 V, 0.2 A (multifuse)	24 V to ETS switches.

LEDs

Pos.	Name	Colour	ON	OFF	Notes
D1	Main contactor pilot relay	Yellow	Pilot relay energises the main contactor.	Main contactor pilot relay is de-energised.	
D61	ADO permit	Yellow	Door zone 1, door zone 2 and ADO/ACL speed signals have gone OFF while elevator is accelerating.		Contactor K487 is energised when LED is lit.
D62	ADO allowed	Yellow	Door zone 1, door zone 2 and ADO/ACL speed signals have come ON while elevator is decelerating.		Contactors K486, K443:1 and K443:2 are energised. K487 is de-energised.
D63	Enable ADO/ACL	Yellow	Elevator is doing Advanced door opening or Relevelling with doors open.		Relay K553 is energised.
D64	ADO/ACL speed	Yellow	Speed is over 0.1 m/s while accelerating.		
D65	Door zone 1	Yellow	Elevator is in door zone area 1 (30 or B30).	Elevator is not in door zone 1.	

LEDs

Pos.	Name	Colour	ON	OFF	Notes
D66	Door zone 2	Yellow	Elevator is in door zone area 2 (61:U/N).	Elevator is not in door zone 2.	
D95	Bypass indicator	Red	Car door or Hall door bypass switch has operated.		
D101	K616:1, K616:2	Yellow	Car speed is below ETS speed.		Speed level 2.
D105	K486	Yellow	Car speed is below 0.65 m/s.		Speed level 1.
D138	K442	Yellow		Inspection or Hoistway access.	
D140	K516U	Yellow	Signal is active.		136:U switch.
D141	K516N	Yellow	Signal is active.		136:N switch.
D147	K487	Yellow		Car has cleared the floor zone and entered the destination floor properly.	
D148	K443:2	Yellow	Car has entered the levelling zone properly.		61:U and 61:N.
D149	K443:1	Yellow	Car has entered the door zone properly.		30.
D165	Motor Encoder input A	Yellow	Signal is active.		Not applicable when RS422/485 input configuration.
D167	Motor Encoder input B	Yellow	Signal is active.		Not applicable when RS422/485 input configuration.

LEDs

Pos.	Name	Colour	ON	OFF	Notes
D169	Encoder input A	Yellow	Signal is active.		
D171	Encoder input B	Yellow	Signal is active.		
D181	Emergency brake NC contact	Yellow	Emergency brake is dropped.		
D182	Emergency brake NO contact	Yellow	Emergency brake is picked.		
D190	Emergency brake control	Green	ADON channels 1 and 2 agree to pick the emergency brake.		
D193	OSG	Green	Overspeed governor switch is ON.	Overspeed governor switch is OFF.	
D194	K464:2	Yellow	ADON channel 2 supervision relay is energised.		Must be energised for emergency brake power supply and main contactor operation.
D195	K464:1	Yellow	ADON channel 1 supervision relay is energised.		Must be energised for emergency brake power supply and main contactor operation.
D197	Fault 2	Red	Fault in ADON channel 1.	ADON channel 1 is OK.	
D198	Fault 1	Red	Fault in ADON channel 1.	ADON channel 2 is OK.	
D214	ADON Channel 1 running	Green	LED is flashing when the channel is running.		
D215	ADON Channel 2 running	Green	LED is flashing when the channel is running.		

Switches and jumpers

Switch	Description	Notes
S1	ACUM Reset	

Jumper	Description
BR1	Enable Buzzer while Car door or Hall door switch is operated.
BR2 – BR7	Selecting the motor encoder interface type at XME1/XME2 connector. All jumpers must be in the same position.
BR8	Enable ADON channel parameter changes.

Connectors

Plug	Description
X5	To the LCECPU board.
X6	To the LCECPU board.
XC1	Car safety.
XC3	Door supply and spare wire to car.
XC5	Norm and HAS connection to LCECCBS.
XCT1	Car encoder signal.
XCT2	Car encoder signal.
XCT3	15VDC supply for car movement encoder.
XD1	To the drive unit's contactor block.
XEB2	Emergency brake.
XF1	A plug for PC connection.
XF2	A plug for PC connection.
XH1	To pit stop switch.
XH2	To landing door lock contacts.
XH3	To landing door lock contacts.
XH21	Lower HAS landing switch.

Connectors

Plug	Description
XH22	Upper HAS landing switch.
XH23	ETS position switch.
XM1	To machinery stop button.
XM2	To switch and fuse module RDF buttons.
XM3	To overspeed governor safety contact.
XM3A	To overspeed governor. Used only for ACUM, otherwise there is a jumper in this plug.
XM4	To counterweight safety contact.
XM5	230 VAC power from transformer.
XM9	Spare wires terminal.
XM21	Bypass switches; NORM and HAS connections.
XM22	To LCEMCU (option).
XM23	Bypass switches.
XME1	Motor encoder signal.
XME2	From the NTS module.

LCEGTW

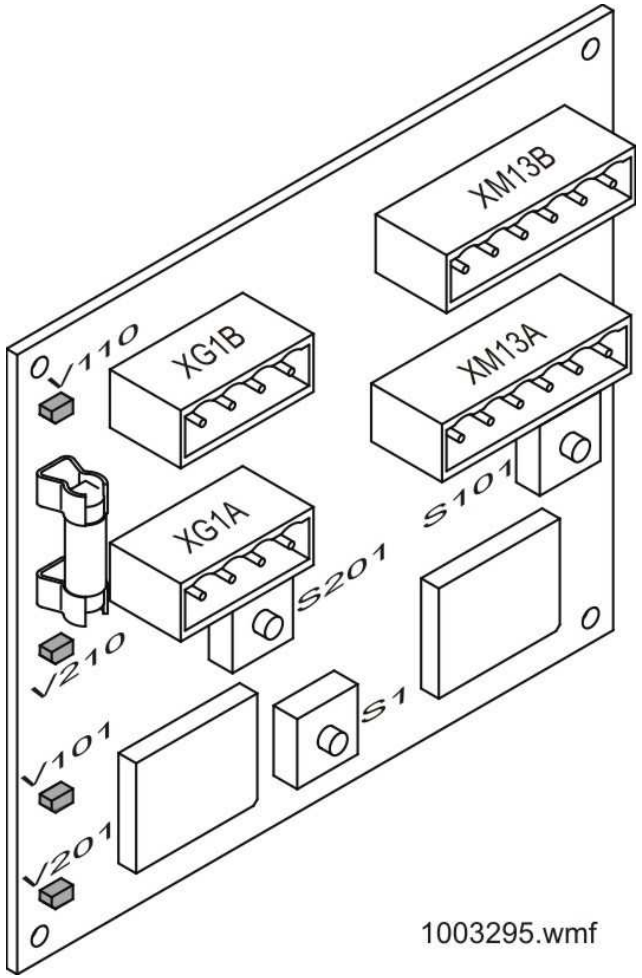
XM13B
XG1B
XM13A
V110
XG1A
S101
S201
V210
S1
V101
V201
1003295.wmf

Fuses

Fuse	Size	Description
F1	250 VAC, 6.3 A	

LEDs

Pos.	Name	Colour	ON	OFF	Notes
V101	Elevator net not OK	Green	LON chip to elevator CPU is working properly.	LON chip to elevator CPU does not work.	
V110	Elevator power OK	Green	24VDC supply from elevator is OK.	24VDC supply from the elevator is missing.	
V201	Group net not OK	Green	LON chip to other elevators is working properly.	LON chip to other elevators' CPU does not work.	
V210	Group power OK	Green	24VDC supply from other elevators is OK.	24VDC supply from other elevators is missing.	

Switches and jumpers

Button	Description	Note
S1	Reset	These buttons are used only when the board is programmed at the factory. The buttons are not used in the field
S101	Service button for LON circuit D101	
S102	Service button for LON circuit D201	

Connectors

Plug	Description
XG1A	Interface to other elevators.
XG1B	Interface to other elevators
XM13A	Interface to the LCECPU board.
XM13B	Interface to the option board.

Description of the LCEGTWO board

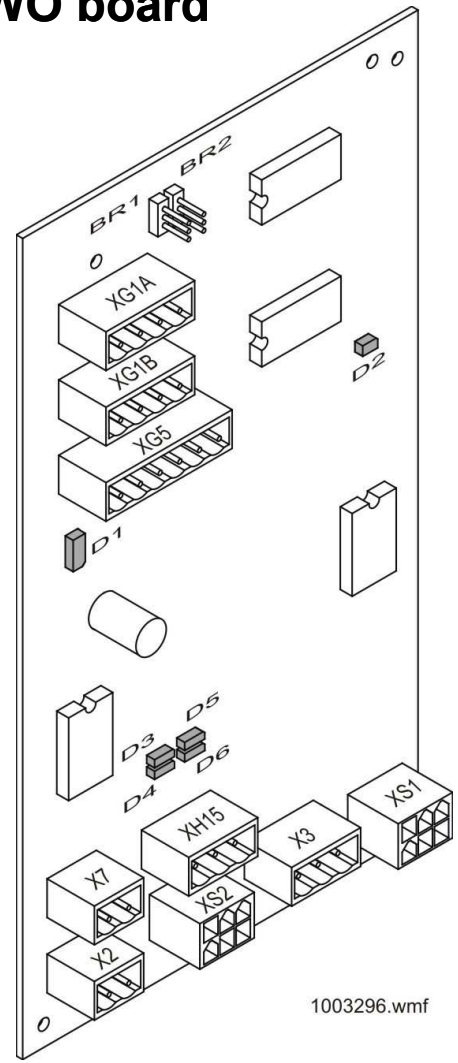

LEDs

Pos.	Name	Colour	ON	OFF	G01	G02
D1	Lift communication NOT OK	Red	LON chip to elevator CPU does not work.	LON chip to elevator CPU is working properly.	X	
D2	Group communication NOT OK	Red	LON chip to elevator CPU does not work.	LON chip to elevator CPU is working properly.	X	
D3	+5 V_B OK	Green	+5 V power is OK.	+5 V power is missing.	X	X
D4	+5 V_C OK	Green	+5 V power is OK.	+5 V power is missing.	X	X
D5	Receive	Yellow	State 1 is active on RS485 commucation lines on connector X3.		X	X
D6	Transmit	Yellow	State 1 is active on RS485 commucation lines on connector XH15 andXS2.		X	X

Switches and jumpers

Switch	Description
BR1	Termination resistor ON / OFF switch.
S101	Termination resistor ON / OFF switch.

Connectors

Plug	Description	G01	G02
X2	Power supply (24 V)	X	X
X3	G01: Communication line from LCECPU. G02: Communication network from the shaft bundle.	X	X
X7	To LCEOPT.	X	
XG1A	To the next LCEGTWO board in the network.	X	
XG1B	From the next LCEGTWO board in the network.	X	
XG5	To the next LCEGTWO board in the network	X	
XH15	To the other segments in the segmented shaft network.	X	
XS1	G01: From LCECPU. G02: From the previous segment in the segmented shaft network.	X	X
XS2	G01: To the first segment in the segmented shaft network. G02: To the next segment in the segmented shaft network.	X	X

LCEOPT

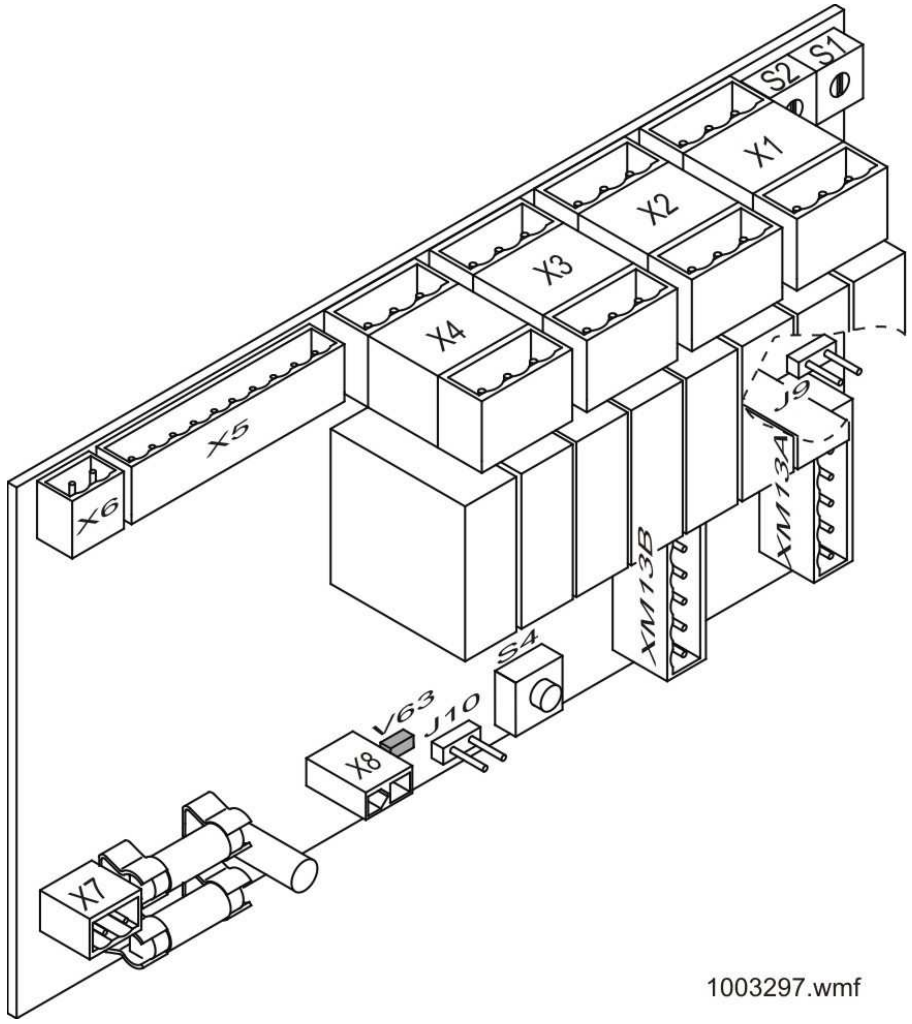
S2
S1
X1
X2
X3
X4
X5
X6
J9
XM13A
XM13B
S4
V63
J10
X8
X7
1003297.wmf

Fuses

Fuse	Size	Description
F1	250 VAC, 315 mA	I/O protection.
F2	250 VAC, 315 mA	I/O protection.

LEDs

Pos.	Name	Colour	ON	OFF	Notes
V3	Service	Red	Failure.	The board is OK.	
V63	+5V	Green	+5V supply is OK.	+5V supply is missing.	

Switches and jumpers

Jumper	Pos.	Description
J9 (Door side)	1-2	Front door.
	2-3	Rear door.
J10 (Input inversion)	1-2	Logically direct.
	2-3	Logically inverted.

Switches and jumpers

Switch	Description
S1	HEX code switch, controller sees it directly without inversion.
S2	BCD code switch, controller sees it directly without inversion.
S4	Push button: Service input for controller

Connectors

Plug	Description
X1	Outputs 1 and 2.
X2	Outputs 3 and 4.
X3	Outputs 5 and 6.
X4	Outputs 7 and 8.
X5	Inputs 1 – 8.
X6	Pull-up voltage for inputs, max. 250 VAC.
X7	24V I/O isolated voltage for pull-up the inputs.
X8	Extra 24 V output.
XM13A	Parallel connections for power and LON network.
XM13B	

LCECCB

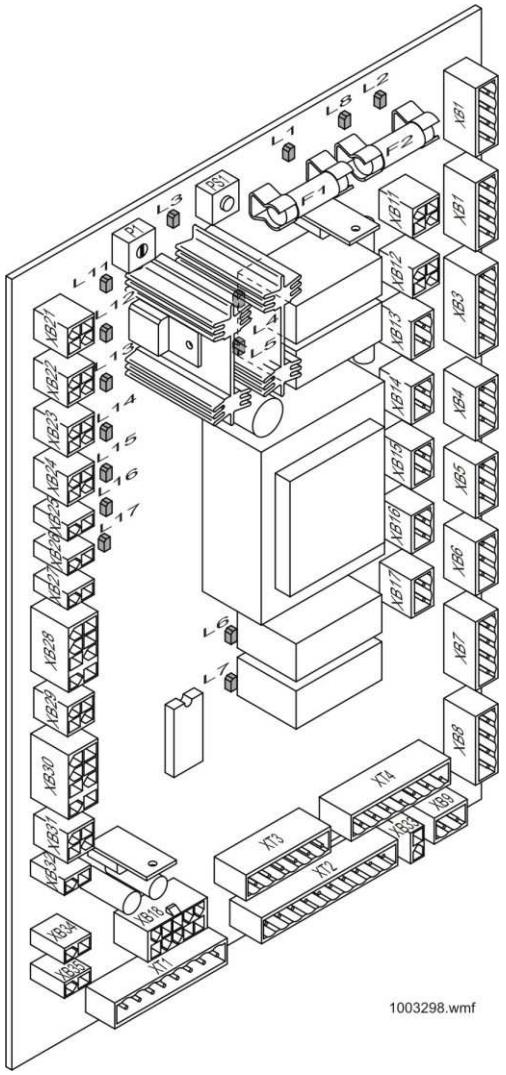

Fuses

Fuse	Size	Description
F1	24 V, 650 mA	24 VDC power supply.
F2	12 V, 2 A	Battery

LEDs

Pos.	Name	Colour	ON	OFF	Notes
L1	24 VDC power supply OK	Green	24 VDC power supply OK.	24 VDC power is missing.	
L2	Battery OK	Green	Emergency battery is charged.	Emergency battery is discharged.	
L3	LON fail	Red	LON error.	LON is OK.	
L4	Battery test	Yellow	Battery test is ongoing.		
L5	Car light OK	Yellow	Car light is OK.		
L6	Car light OFF	Yellow	Car light is OFF.		
L7	Car ventilation OFF	Yellow	Car ventilation is OFF.	Car ventilation is ON.	
L8		Green	The battery is not overloaded.	The battery is overloaded.	

LEDs

Pos.	Name	Colour	ON	OFF	Notes
L11	30	Yellow	Car is at front door zone.		Position switch 30 is closed.
L12	61U	Yellow	Car is at floor or below it.		Position switch 61:U is closed.
L13	61N	Yellow	Car is at floor or below it.		Position switch 61:N is closed.
L14	B30	Yellow	Car is at rear door zone.		Position switch B30 is closed.
L15	77U	Yellow	Car is NOT in the top deceleration area.		Deceleration switch 77:U is closed. Different LED polarity than at LCECPU board.
L16	77N	Yellow	Car is NOT in the bottom deceleration area.		Deceleration switch 77:N is closed. Different LED polarity than at LCECPU board.
L17	77S	Yellow	Car is NOT in the synchronization area.		Deceleration switch 77:S is closed. Different LED polarity than at LCECPU board.

Connectors

Plug	Description
XB1	Final limit switch 51.
XB2	Safety gear 52.
XB3	Inspection station 42.
XB4	Rear door stop button B41.
XB5	Safety lock 63.
XB6	Trap door 57.
XB7	Door contact A87.
XB8	Door contact B87.
XB11	Insulation test.
XB12	Inspection station 24VDC signals 42.
XB13	230VAC plug 45.
XB14	Car light 44.
XB15	Car ventilation 43.
XB16	Door A supply.
XB17	Door B supply
XB18	To Car Operating Panel.
XB21	Door zone A30.

Connectors

Plug	Description
XB22	Step up 61:U.
XB23	Step down 61:N.
XB24	Door zone B / B30.
XB25	Deceleration switch up 77:U.
XB26	Deceleration switch down 77:N.
XB27	Synchronisation switch 77:S.
XB28	Door operator A / A84.
XB29	Photocell A / A90.
XB30	Door operator B / B84.
XB31	Photocell B / B90.
XB32	Battery 227.
XB33	KoneXion.
XB34	Emergency light for car roof.
XB35	Alarm bell 65.
XT1	To the LCECPU board –> XC11.
XT2	To LCECPU → XC12
XT3	To LCE230 → XC3 and XC4.
XT4	To LCECPU → XC1.

Description of the LCECCBN board

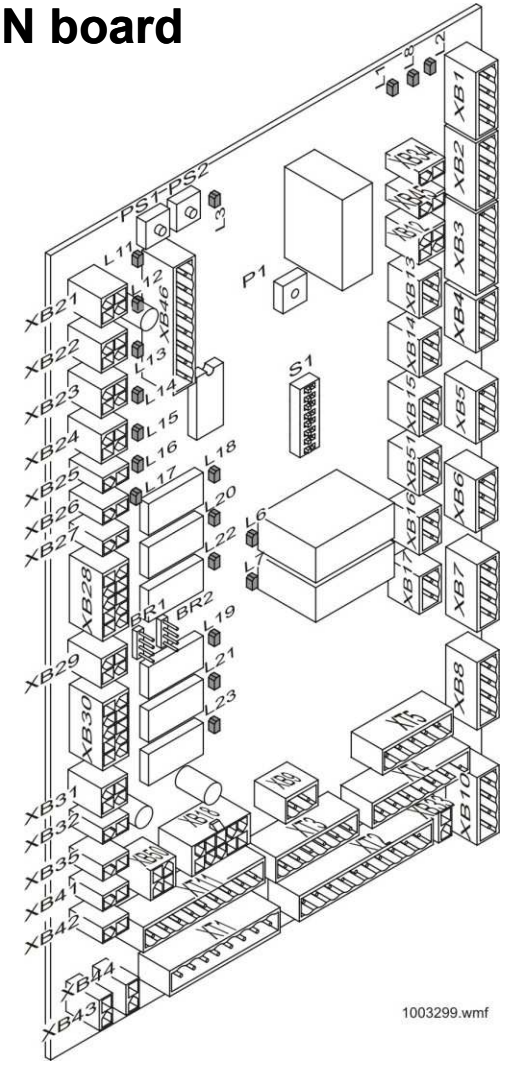

LEDs

Pos.	Name	Colour	ON	OFF	Notes
L1	24 VDC power supply OK	Green	24 VDC power supply OK.	24 VDC power is missing.	
L2	Battery OK	Green	Emergency battery is charged.		
L3	Communication fail	Red	Communication failure.		
L8	Battery fuse F2 OK	Yellow	Battery fuse is OK.		
L11	30	Yellow	Car is at front door zone.		Position switch 30 is closed.
L12	61U	Yellow	Car is at floor or below it.		Position switch 61:U is closed (BAR channels A and B).
L13	61N	Yellow	Car is at floor or above it.		Position switch 61:N is closed. (BAR channels A and B).
L14	B30	Yellow	Car is at rear door zone.		Position switch B30 is closed.
L15	77U	Yellow	Car is NOT in the top deceleration area.		Deceleration switch 77:U is closed. Different LED polarity than at LCECPU board.
L16	77N	Yellow	Car is NOT in the bottom deceleration area.		Deceleration switch 77:N is closed. Different LED polarity than at LCECPU board.
L17	77S	Yellow	Car is NOT in the synchronisation area.		Synchronisation switch 77:S is closed. Different LED polarity than at LCECPU board.

LEDs

Pos.	Name	Colour	ON	OFF	Notes
L18	Open door A	Yellow	Command is active.		
L19	Open door B	Yellow	Command is active.		
L20	Close door A	Yellow	Command is active.		
L21	Close door B	Yellow	Command is active.		
L22	Nudging A	Yellow	Command is active.		
L23	Nudging B	Yellow	Command is active.		
L24	15 V OK	Green	Encoder 15 VDC is OK.	Encoder 15 VDC is missing.	

Switches and jumpers

Switch	Pos.	Description
BR1 (Door A)	+24V	+24 VDC supplied as common from LCE to door.
	Ext	Door supplies a signal common. (Voltage max. 48 V DC or AC)
	0/24V	0/24VDC supplied as common from LCE to door.
BR2 (Door B)	+24V	+24 VDC supplied as common from LCE to door.
	Ext	Door supplies a signal common. (Voltage max. 48 V DC or AC)
	0/24V	0/24VDC supplied as common from LCE to door.

Connectors

Plug	Description
XB1	Final limit switch 51.
XB2	Safety gear 52.
XB3	Inspection station 42.
XB3A	Inspection station 42.
XB4	Remote door stop button B41.
XB5	Safety lock 63.
XB6	Trap door 57.
XB7	Door contact A87.
XB8	Door contact B87.
XB9	Travelling cable spare.
XB12	Inspection station 24 VDC signal 42.
XB12B	HAS (Hoistway Access) functions.
XB12N	HAS (Hoistway Access) functions.
XB13	230 VAC plug 45.
XB14	Car light 44.
XB15	Car ventilation 43.
XB16	Door A supply.
XB17	Door B supply.
XB18	To Car Operating Panel.

Connectors

Plug	Description
XB21	Door zone A30.
XB22	Step up 61:U.
XB23	Step down 61:N.
XB24	Door zone B / B30.
XB25	Deceleration switch up 77:U.
XB26	Deceleration switch up 77:N.
XB27	Synchronication switch 77:S.
XB28	Door operator A / A84.
XB29	Photocell A / A90.
XB30	Door operator B / B84.
XB31	Photocell B / B90.
XB32	Battery 227.
XB33	KoneXion.
XB34	Emergency light for car roof.
XB35	Alarm bell 65.
XB40	Stop button 40.
XB41	Anticreep 73:1.
XB42	Anticreep 73:2.
XB43	Ramp A 67.

Connectors

Plug	Description
XB44	Ramp B 67.
XB45	Service drive limit switch 68:U.
XB46	BAR reader, LCECCN.
XB50	Load weighing device 64.
XB51	Ext supply.
XB52	+24 VDC in/out.
XB53	Car top encoder.
XB55	+24 VDC output.
XB66	LCECCN.
XP2	Service tool socket.
XT1	To the LCECPU board → XC11.
XT2	To LCECPU → XC12.
XT3	To LCECPU.
XT4	To LCECPU → XC1.
XT5	To LCECPU.
XT6	Inspection.
XT8	Power supply.
XT11	LWD to LCEDRV and door power supply.

Description of the LCECCEB board

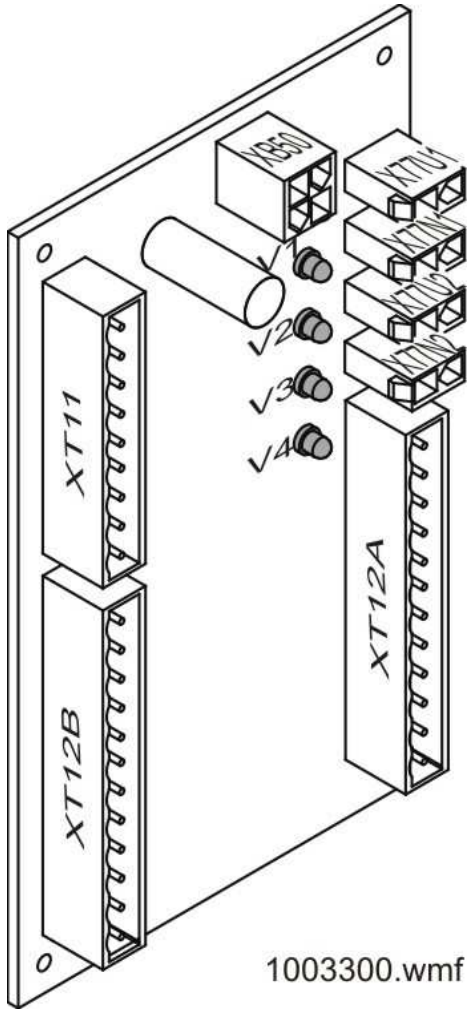

LEDs

Pos.	Name	Colour	ON	OFF	Notes
V1	77:U1	Yellow	Signal is active.		
V2	77:N1	Yellow	Signal is active.		
V3	77:U2	Yellow	Signal is active.		
V4	77:N2	Yellow	Signal is active.		

Switches and jumpers

DIP-switch	Pos.	Description
S1	1	Force lim. A.
	2	Open end A.
	3	Close end A.
	4	Photocell A disable.
	5	Force lim. B.
	6	Open end B.
	7	Close end B.
	8	Photocell B disable.

Jumper	Description	Pos 1-2	Pos 2-3	Notes
X1	Door selection.	Door A selected	Door B selected	

Connectors

Plug	Description
X77U1	77:U1 Switch.
X77U2	77:U2 Switch.
X77N1	77:N1 Switch.
X77N2	77:N1 Switch.
XB50	Load Weighing Device.
XT11	Travelling cable.
XT12A	Car lockings.
XT12B	Travelling cable.

LCECOB

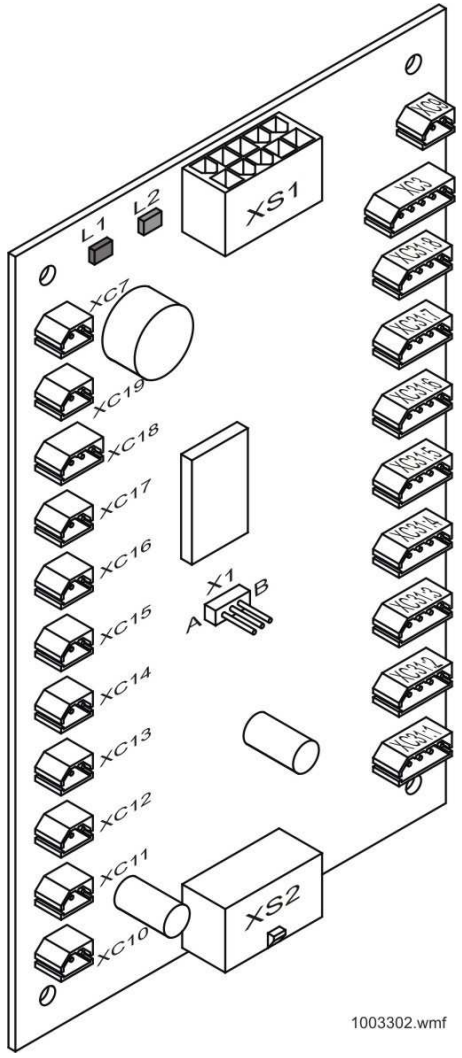
L1
L2
XS1
XC7
XC19
XC18
XC17
XC16
XC15
XC14
XC13
XC12
XC11
XC10
X1
A
B
XS2
1003302.wmf

LEDs

Pos.	Name	Colour	ON	OFF	Notes
L1	Power	Green	Power supply is OK.	Power supply is missing.	
L2	Fail	Red	Fault diagnostics.		

Switches and jumpers

Jumper	Pos.	Description
X1 (Door selection)	1	Door A.
	3	Door B.

Connectors

Plug	Description
XC3	Chip select, clock, data (output); 24VDC (supply).
XC7	Emergency light (output); +12VBAT (supply).
XC9	Alarm (input); +12VBAT (supply).
XC10	Door open button (input); 24VDC (supply).
XC11	Door close button (input); 24VDC (supply).
XC12	Fireman drive (input); 24VDC (input).
XC13	Operation of car ventilation (input); 24VDC (supply).
XC14	Spare.
XC15	Out of service (input); 24VDC (supply).
XC16	Priority call (input); 24VDC (supply).
XC17	Door extension time (input); 24VDC (supply).
XC18	Intercom A (output); intercom B (input); 12VBAT (supply).
XC19	Help is coming (output); 12VBAT (supply).

Connectors

Plug	Description
XC31:1	Car call 1; input/output; 24VDC (supply).
XC31:2	Car call 2; input/output; 24VDC (supply).
XC31:3	Car call 3; input/output; 24VDC (supply).
XC31:4	Car call 4; input/output; 24VDC (supply).
XC31:5	Car call 5; input/output; 24VDC (supply).
XC31:6	Car call 6; input/output; 24VDC (supply).
XC31:7	Car call 7; input/output; 24VDC (supply).
XC31:8	Car call 8; input/output; 24VDC (supply).
XS1	Serial interface connections.
XS2	

F2KMUL

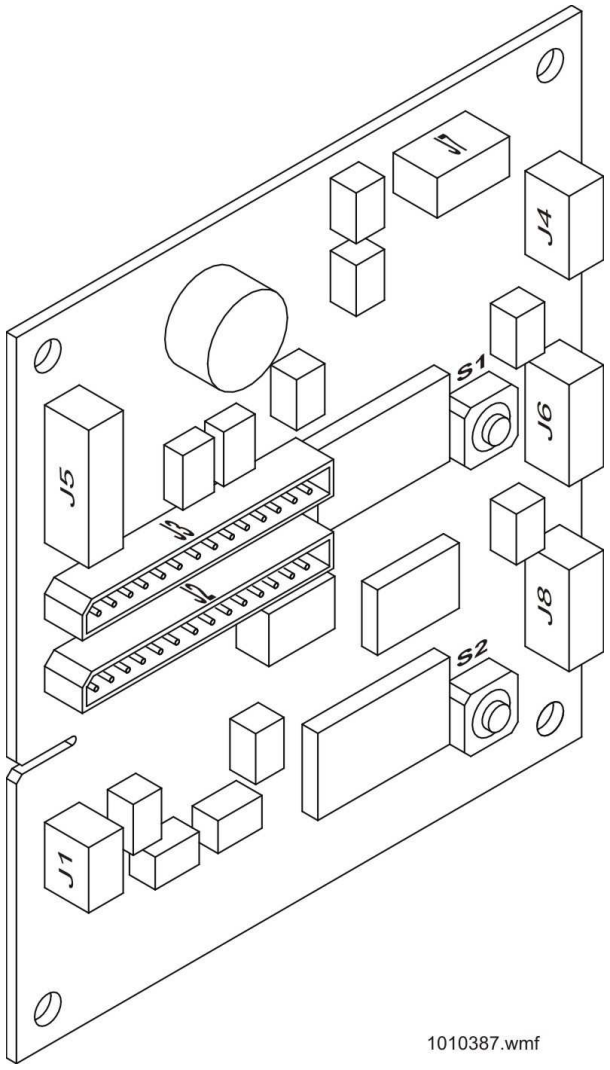

Connectors

Plug	Description
J1	Audio equipment (loudspeaker and microphone).
J2	Network in.
J3	Network out.
J4	Alarm button.
J5	Display
J6	Car button bus 1.
J8	Car button bus 2.

LCECEB

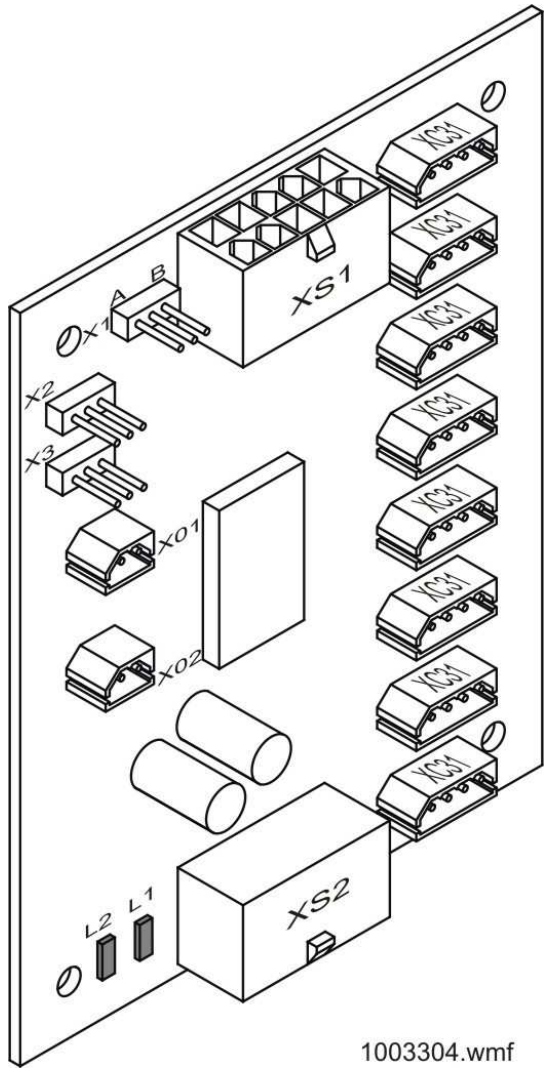

1003304.wmf

LEDs

Pos.	Name	Colour	ON	OFF	Notes
L1	Power OK	Green	Power supply is OK.	Power supply is missing.	
L2	Fail	Red	The board is broken.		

Switches and jumpers

Jumper	Pos.	Description
X1	A	Door side A.
	B	Door side B.
X2 + X3	1	Both jumpers in position 1 (n=0): calls for floors 9…16.
X2	1	X2 in position 1 and X3 in position 2 (n=8): car Calls for floors 17…24.
X3	3	

Connectors

Plug	Description
XC31:(9+n)	Car call 9; input/output; 24VDC (supply).
XC31:(10+n)	Car call 10; input/output; 24VDC (supply).
XC31:(11+n)	Car call 11; input/output; 24VDC (supply).
XC31:(12+n)	Car call 12; input/output; 24VDC (supply).
XC31:(13+n)	Car call 13; input/output; 24VDC (supply).
XC31:(14+n)	Car call 14; input/output; 24VDC (supply).
XC31:(15+n)	Car call 15; input/output; 24VDC (supply).
XC31:(16+n)	Car call 16; input/output; 24VDC (supply).
XO1	Auxiliary 1 (input); 24VDC (supply).
XO2	Auxiliary 2 (input); 24VDC (supply).
XS1	Serial interface connections.
XS2	

LCEFCB

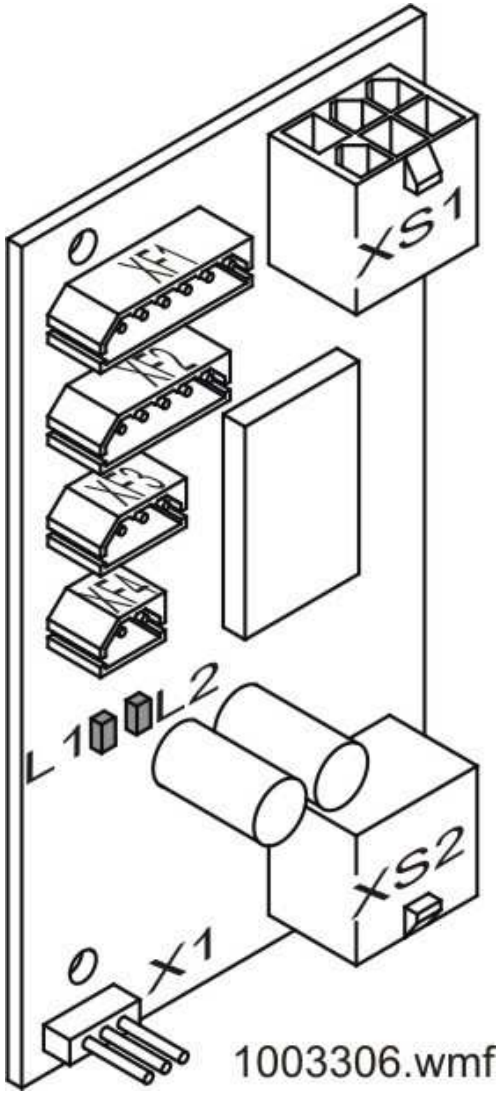

LEDs

Pos.	Name	Colour	ON	OFF	Notes
L1	Power OK	Green	The cable is OK. Power is OK. Fuse is OK.		The LED blinks when power is on and the LON software starts running. When Roll Call has passed the board, the LED lights continuously.
L2	Fail	Red	Flashes when the board is performing the roll Call operation. If the LED is ON constantly, the board is not working properly.		If the LED lights constantly, replace the board.

Switches and jumpers

Jumper	Pos.	Description
X1	1	Front door A.
	3	Rear door B.

Switches and jumpers of LCEFCB G03

Jumper	Pos.	Description
X1	1	Front door A.
	3	Rear door B.
X2		Jumpers for floor number selection. NOTE! Only in LCEFCB G03.
X3		
X4		
X5		
X6		

Connectors

Plug	Description
XF1	Call button unit interface.
XF2	SPI interface for display. (G01, G03).
XF3	OSS key switch inputs. (G01, G03).
XF4	OSS indication lamp. (G01, G03).
XS1	Serial interface connections.
XS2	

LCEFOB

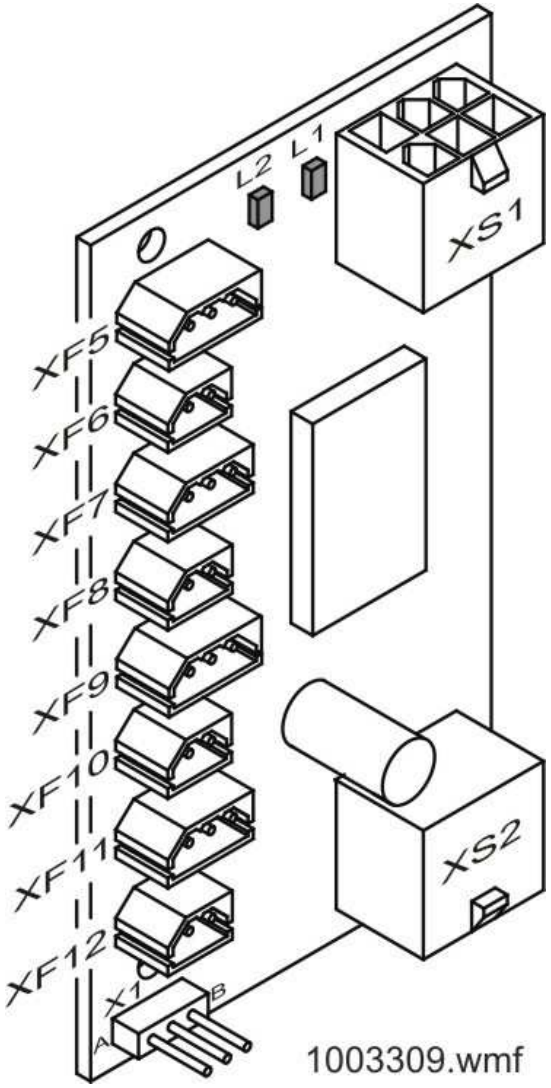
L2
L1
XS1
XF5
XF6
XF7
XF8
XF9
XF10
XF11
XF12
X1
A
B
XS2
1003309.wmf

Fuses

Fuse	Size	Description
F1	475 mA	Automatic fuse for I/O protection.

LEDs

Pos.	Name	Colour	ON	OFF	Notes
L1	Power OK	Green	Power is ON.		
L2	NET OK	Red	The board is broken.		This is a LON service LED.

Switches and jumpers

Jumper	Pos.	Description
X1	1	Front door A.
	3	Rear door B.

Connectors

Plug	Description
XF1	Serial interface connections.
XF2	
XF5	Not used.
XF6	Not used.
XF7	Not used.
XF8	Not used.
XF9	Input PRL or HEL key switch.
XF10	Output PRL or HEL key switch.
XF11	Not used.
XF12	Not used.

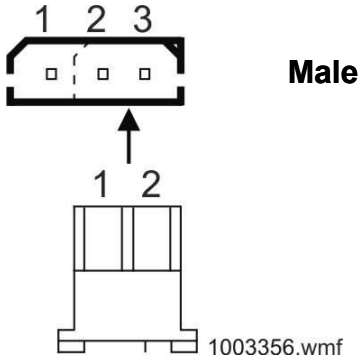

Male plug on the board

LCEHAS

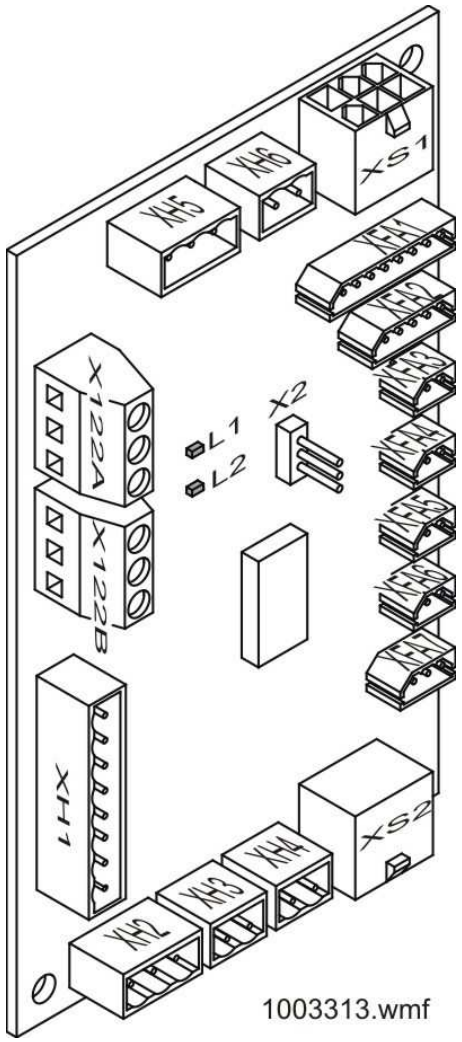
XS1
XH5
XH6
XH1
XH2
XH3
XH4
XH5
XH6
XH7
X122A
X122B
L1
L2
X2
XH1
XH2
XH3
XH4
XS2
1003313.wmf

LEDs

Pos.	Name	Colour	ON	OFF	Notes
L1	Power OK	Green	Power supply is OK.	Power supply is missing.	
L2	Fail	Red	Flashes when the board is performing the roll Call operation. If the LED is ON constantly, the board is not working properly.	The board is OK.	If the LED lights constantly, replace the board.

Switches and jumpers

Jumper	Pos.	Description
X2	A	Door side A.
	B	Door side B.

Connectors

Plug	Description
X112A	Safety circuit.
X112B	Safety circuit.
XFA1	Landing call buttons (LCEFCB24).
XFA2	SPI (LCEFCB24).
XFA3	Arrow up (LCEFCB24).
XFA4	Arrow down (LCEFCB24).
XFA5	Gong (LCEFCB24).
XFA6	HEL ind. (LCEFCB24).
XFA7	HEL sw. (LCEFCB24).
XH2	Safety circuit.
XH1	HAS switch connections.
XH3	HAS up limit.
XH4	HAS down limit.
XH5	FRD switch input.
XH6	FRD switch output.
XS1	Network in the shaft module.
XS2	

LCEREC

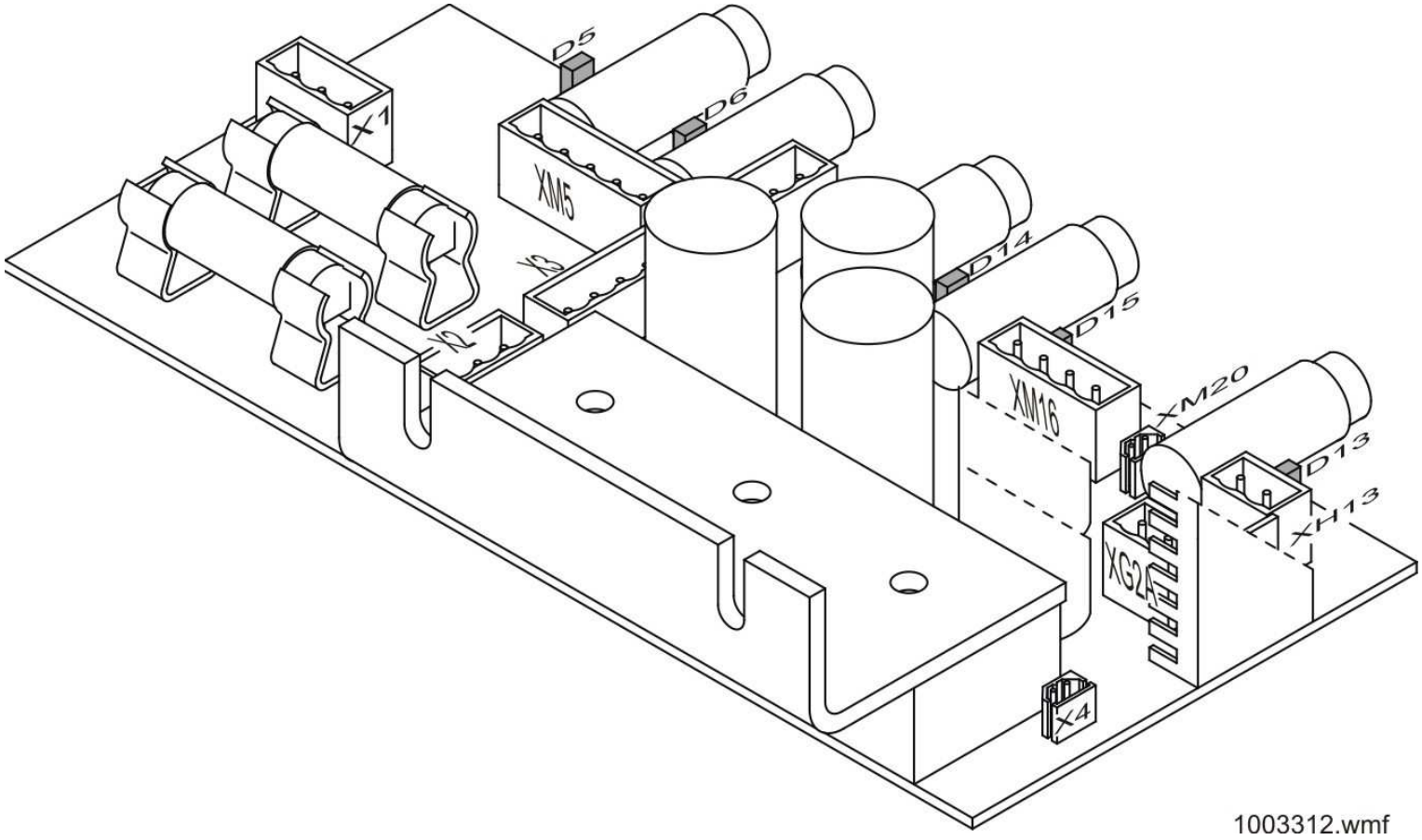

Fuses

Fuse	Size	Description
F2	230 V, 2…6.3 A	Control panel
F3	230 V, 2…4 A	Door
F4	24 V, 4 A	Car
F5	24 V, 4 A	Control panel
F6	400 V, 2…6 A	Transformer
F7	200 V, 2…6 A	Transformer
F8	24 V, 4…8 A	Shaft
F9	20 VAC	Car / shaft

Fuses

Board version	F2	F3	F4	F5	F6	F7	F8	F9
G01	2 A	2 A	4 A	4 A	6 A	6 A	-	-
G02	2 A	4 A	4 A	4 A	6 A	6 A	4 A	-
G03	-	-	4 A	-	-	-	4 A	-
G04	6.3 A	4 A	4 A	4 A	6 A	6 A	4 A	-
G05	-	-	4 A	4 A	2 A	2 A	8 A	-
G06	-	-	-	-	-	-	8 A	-
G07	-	-	4 A	4 A	4 A	4 A	8 A	-
G08	6 A	-	4 A	4 A	6 A	6 A	4 A	-
G09	2.5 A	-	4 A	4 A	6 A	6 A	4 A	-

LEDs

Pos.	Name	Colour	ON	OFF	Notes
D5	230 VAC	Green	Control voltage is OK.	Control voltage is missing.	
D6	230 VAC	Green	Door operator supply is OK.	Door operator supply is missing.	
D13	24 V	Green	Shaft voltage is OK.	Shaft voltage is missing.	
D14	24V	Green	Car voltage is OK.	Car voltage is missing.	
D15	24V	Green	Control panel voltage is OK.	Control panel voltage is missing.	

Connectors

Plug	Description
X1	400 VAC for the main supply.
X2	Primary in from transformer.
X3	Secondary out to transformer.
X4	24 V external power ground.
XG2A	24 VDC shaft backup to the next elevator.
XH13/XM17	24 VDC shaft out to LCECPU.
XM5	230 VAC out to LCE23O or LCEADO.
XM16	24 VDC out to LCECPU
XM20	24 VDC battery (FRD UK).
XM25	20 VAC supervision from LCECPU.

Different versions

Version	Description
LCEREC G01	Use in old electrification. Changeable fuses.
LCEREC G02	
LCEREC G03	
LCEREC G04	
LCEREC G05	Use in KONE MonoSpace® 2.0. Self-resetting fuses (24 V multifuses) on the boar. Some changeable fuses (230 VAC) in the Maintenance Access Panel (MAP).
LCEREC G06	
LCEREC G07	
LCEREC G08	Use in North America and in KONE MiniSpace™ 1.5 also in Europe an Asia. 24 V multifuses an 230 VAC changeable fuses on the board.
LCEREC G09	Use in North America. 24 V multifuses an 230 VAC changeable fuses on the board.

LCE-ETS

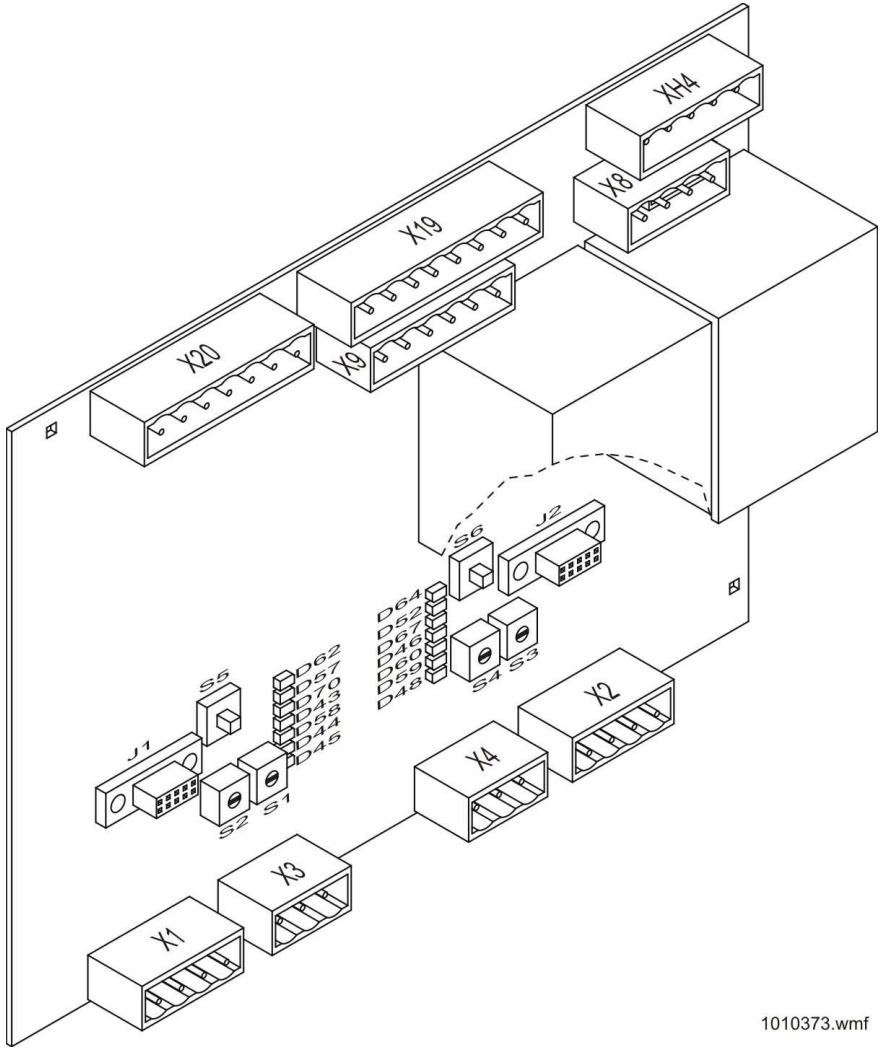
XH4
X8
X19
X9
X20
S6
J2
D64
D52
D67
D46
D60
D59
D48
S4
S3
X2
X4
S5
D62
D57
D70
D43
D58
D54
D45
J1
S2
S1
X3
X1
1010373.wmf

LEDs

Pos.		Name	Colour	ON	OFF	Notes
Channel a	Channel 2					
D58	D60	Reset	Red	Reset is not active.		
D43	D46	Input A	Yellow	Input A is active.		
D44	D59	Channel state	Yellow	Channel is at lowspeed state.		
D45	D48	Sensor OK	Green	Sensor is OK.		
D62	D64	+24 V OK	Green	+24 V is present.	+24 V is missing.	
D57	D52	+5 V OK	Green	+5 V is present.	+5 V is missing.	
D70	D67	+3 V 3 OK	Green	+3 V 3 operating voltage is present.	+3 V 3 is missing.	Optional LED.

Switches and jumpers

Switch	Description	Notes
S1	Speed setting	For channel a
S2	Speed setting	
S3	Speed setting	For channel 2.
S4	Speed setting	

Connectors

Plug	Description
J1	PLD programming interface.
J2	PLD programming interface.
X1	Sensor interface.
X2	Sensor interface.
X3	Sensor interface to the next board.
X4	Sensor interface to the next board.
X8	Safety chain.
X9	Safety chain.
X19	Power and safety chain.
X20	Safety chain proper voltage detection.
XH4	Safety chain.

LCE-ETSL

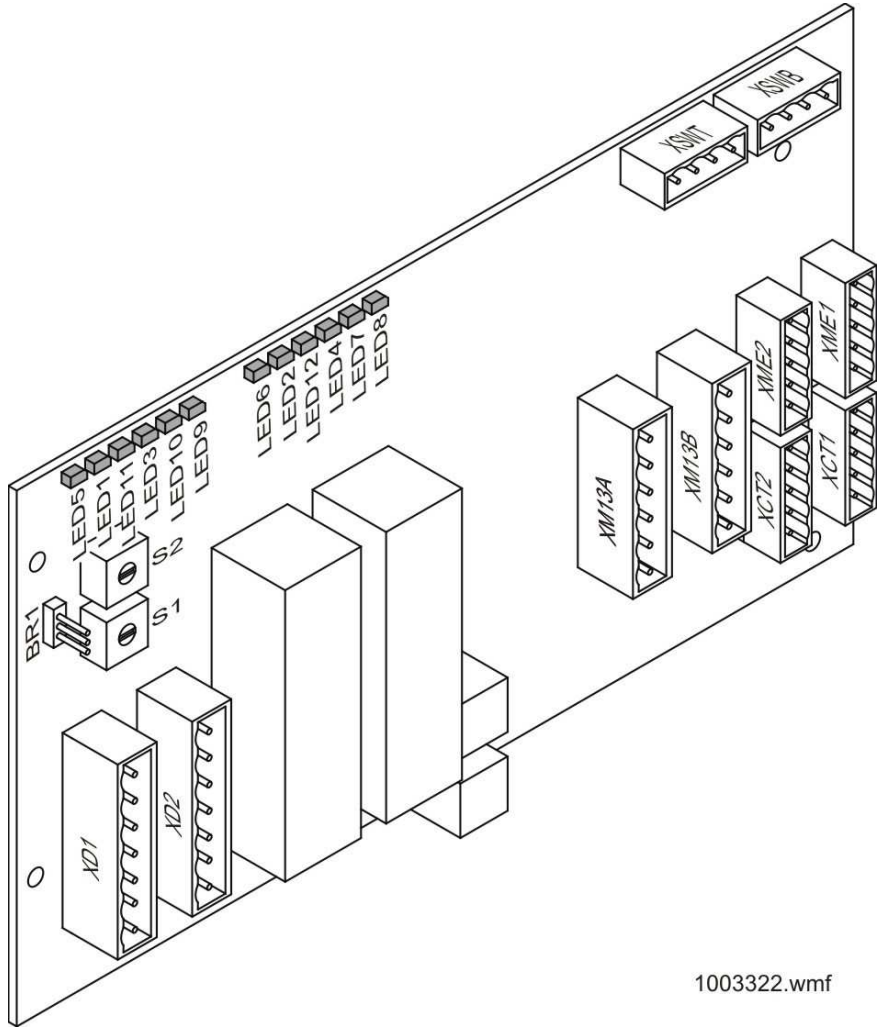
XS/IB
XS/IT
LED5
LED1
LED11
LED3
LED10
LED9
LED6
LED2
LED12
LED4
LED7
LED8
S2
S1
BR1
XM13A
XM13B
XCT2
XME2
XME1
XCT1
XO1
XO2
1003322.wmf

LEDs

Pos.	Name	Colour	ON	OFF	Notes
L1	Service – Car channel	Red	LON is faulty.	LON is OK.	
L2	Service – motor channel	Red	LON is faulty.	LON is OK.	
L3	Cartop / OSG encoder	Yellow	Flashes with the cartop / OSG encoder		
L4	Motor encoder	Yellow	Flashes with the motor encoder		
L5	5 V OK – car channel	Green	5 V is present.	5 V is missing.	
L6	5 V OK – motor channel	Green	5 V is present.	5 V is missing.	
L7	Top switch – motor channel	Yellow	Signal is active.		
L8	Bottom switch – motor channel	Yellow	Signal is active.		
L9	Bottom switch – car channel	Yellow	Signal is active.		
L10	Top switch – car channel	Yellow	Signal is active.		
L11	ATS fault – car channel	Red	Fault in car channel.	Channel is OK.	
L12	ATS fault – motor channel	Red	Fault in motor channel.	Channel is OK.	

Switches and jumpers

Jumper	Pos.	Description
BR1 (Setup selector)	1-2	Run: Protects the memory on the LCE-ETSL board while the elevator is in normal operation.
	2-3	Setup: Allows the changing of the parameter values, but does not allow normal operation.

Switch	Description	Notes
S1	Speed setting	First digit: Setting this rotary switch sets the first digit of the set speed. For example: 2 for 2.x m/s.
S2	Speed setting	Tenth digit: Setting this rotary switch sets the tenth digit of the set speed. For example: 5 for x.5 m/s.

Connectors

Plug	Description
XCT1	Car/OSG encoder from LCEADON or LCE-ETSL.
XCT2	
XD1	Safety chain hook-up from the LCEADON board.
XD2	
XM13A	LON/power connector from the LCEOPT board.
XM13B	
XME1	Motor encoder from LCEADON or LCE-ETSL.
XME2	
XSWB	Top and bottom position switches.
XSWT	

LCERAL

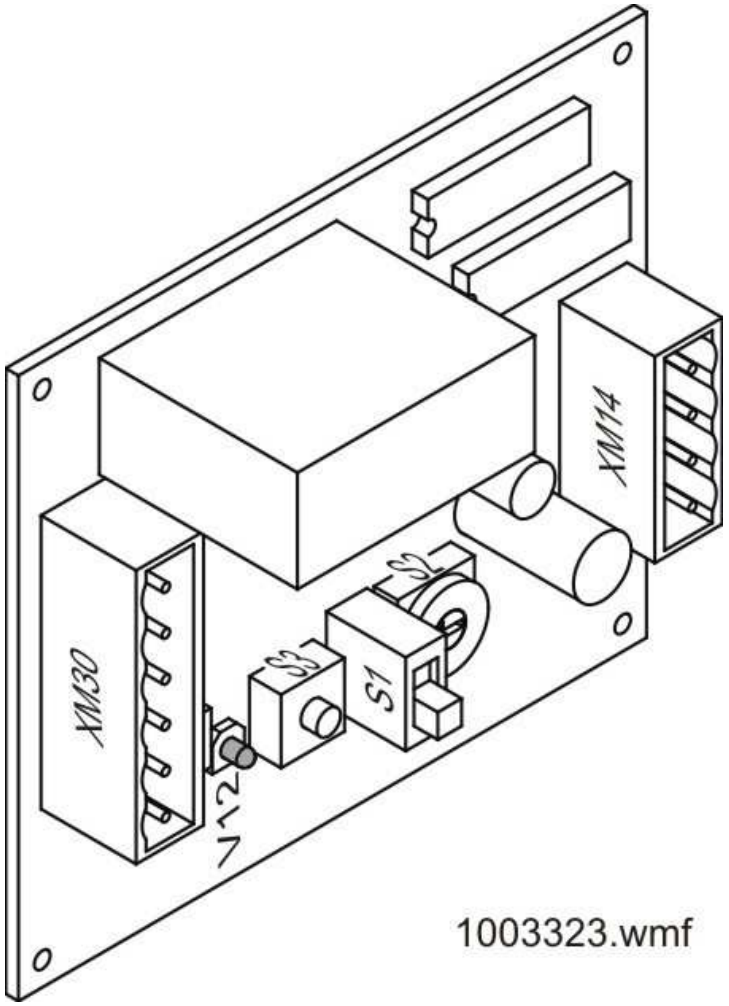

LEDs

Pos.	Name	Colour	ON	OFF	Notes
V12	Alarm pressed	Red	The remote alarm is activated.		

Switches and jumpers

Switch	Description	Notes
S1	Alarm ON/OFF	The switch is normally ON.
S2	Alarm delay time	16-position code switch.
S3	Reset alarm	

Connectors

Plug	Description
XM14	To car via LCECPU
XM30	To remote alarm system

LCEEAQ

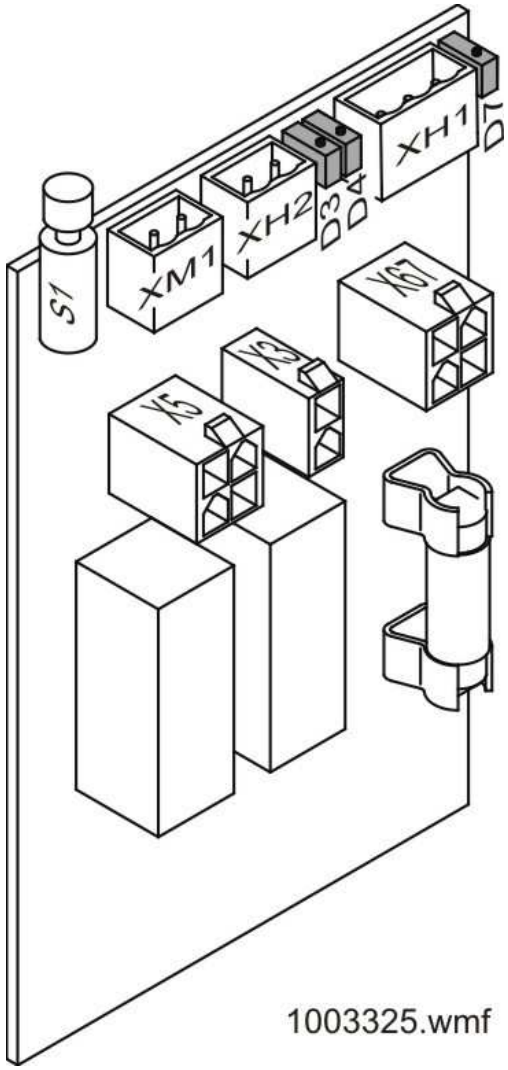

Fuses

Fuse	Size	Description
F1	0.315 A	

LEDs

Pos.	Name	Colour	ON	OFF	Notes
D3	Counterweight derailment memory	Green	K1 is picked (in normal mode).		
D4	Counterweight derailment status	Green	K2 is picked (in normal mode).		
D7	Power OK	Green	Power is OK.	Power is missing	

Switches and jumpers

Switch	Description	Notes
S1	Alarm ON/OFF	The switch is normally ON.
S2	Alarm delay time	16-position code switch.
S3	Reset alarm	

Connectors

Plug	Description
X3	From the LCEOPT board.
X5	To the LCEOPT board.
X67	From position switches.
XH1	From the counterweight derailment detector (190:1).
XH2	To a seismic device (190).
XM1	To another elevator in the group.

LCEDOMCS

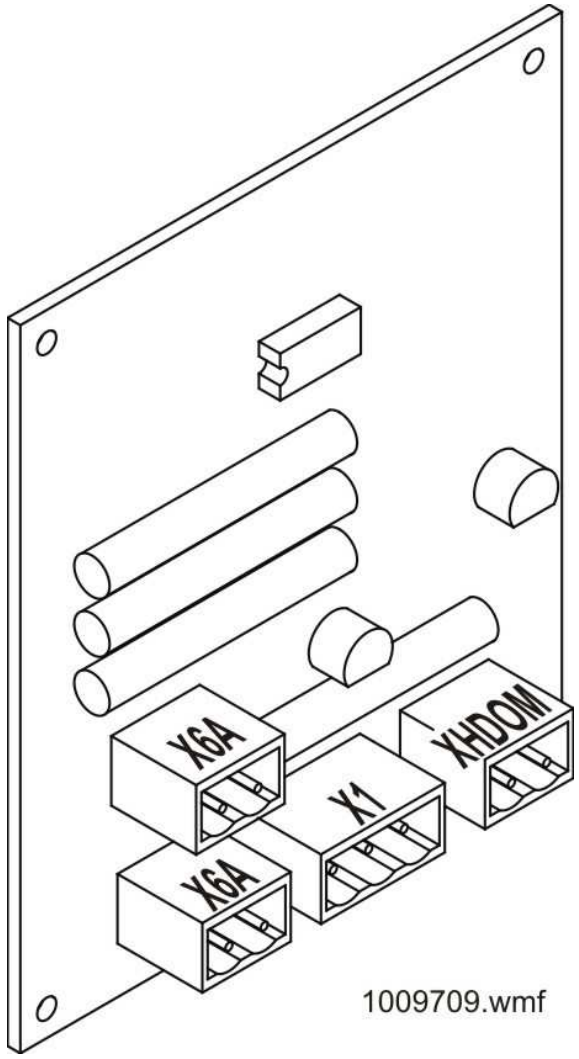

Connectors

Plug	Description
X3	From the LCEOPT board.
X5	To the LCEOPT board.
X67	From position switches.
XH1	From the counterweight derailment detector (190:1).
XH2	To a seismic device (190).
XM1	To another elevator in the group.

LCEAMAX

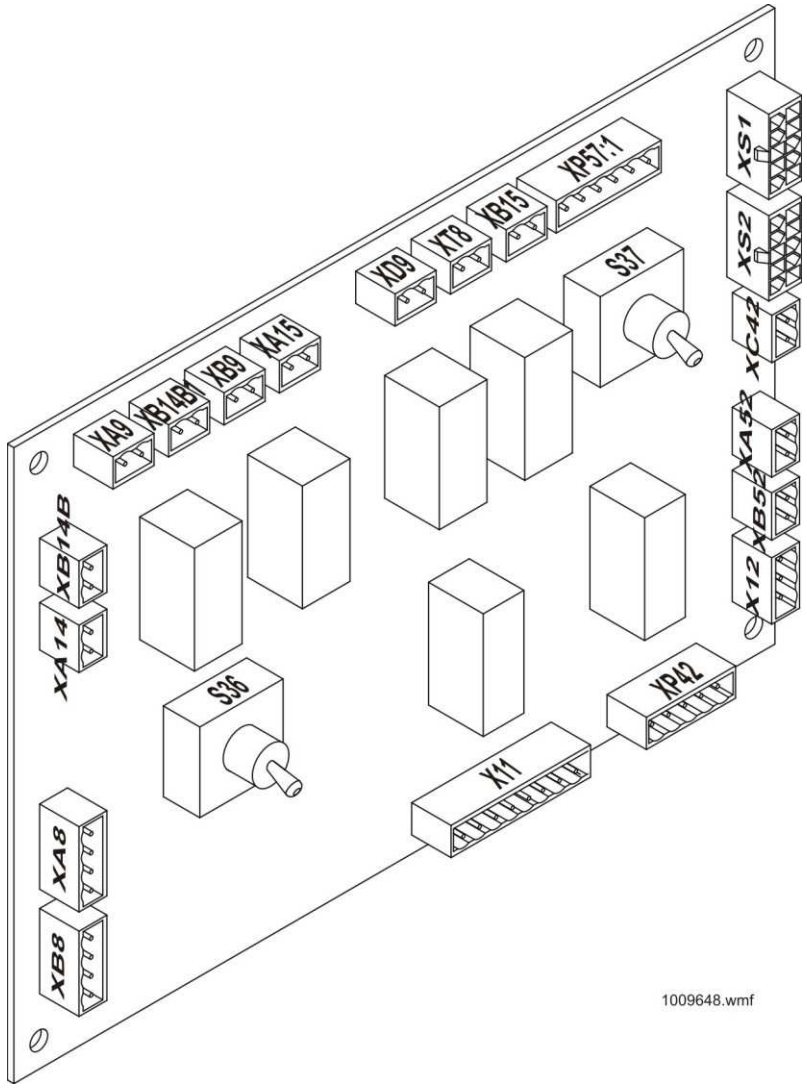
XA9
XB14B
XB9
XA15
XD9
XT8
XB15
XP57:1
XS1
XS2
XC42
XA52
XB52
X12
XA14
XB14B
S36
S37
XP42
X11
XA8
XB8
1009648.wmf

Switches and jumpers

Switch	Description	Notes
S36	Car lighting supply	
S37	Car fan supply	

Connectors

Plug	Description
X11	Safety chain (230 VAC), switch 42.
X12	LDB unit output.
XA8	Safety chain (230 VAC).
XA9	Car ventilation output.
XA14	Car light input from LCECCBN.
XA15	Car ventilation input.
XA52	24 VDC input from LCECCBN.
XB8	Safety chain (230 VAC), door contact B87.
XB9	Emergency light and car fan input.
XB14	Car light output.
XB14B	Emergency light output.

Connectors

Plug	Description
XB15	Car fan supply.
XB52	24 VDC output to LCECCBN.
XC42	Hoistway Access System (HAS) input from LCECCBN.
XD9	Car ventilation input.
XP42	Safety chain / car input from LCEHKM.
XP57:1	Trap door contact inputs.
XS1	From LCECCBN.
XS2	To the Car Operating Panel.
XT8	From LCECCBN.

LCEHKM

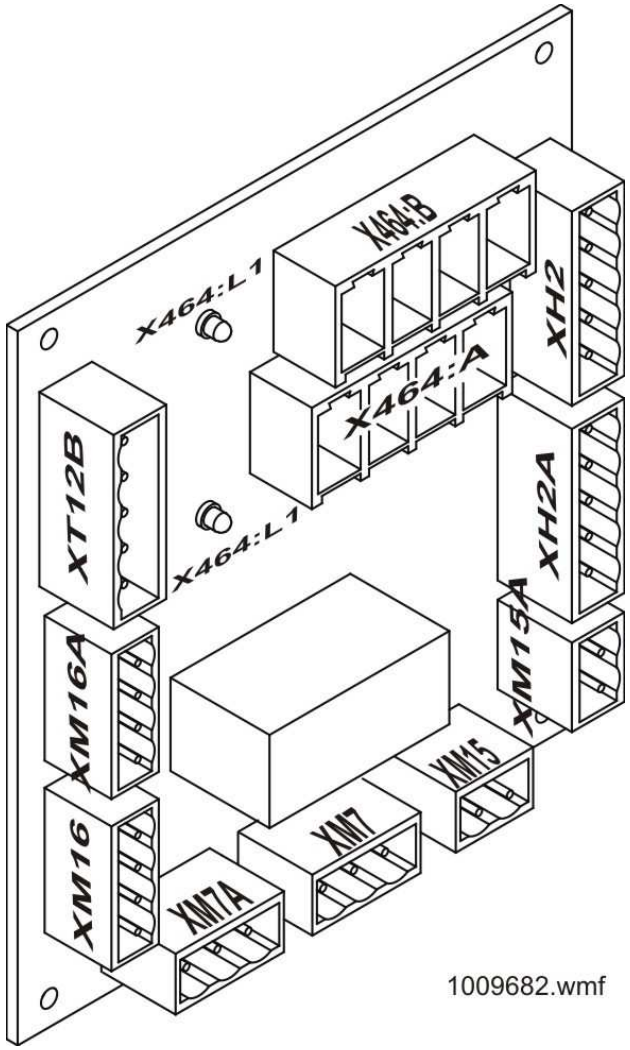
X464:B
X464:L1
XH2
X464:A
XT12B
XH2A
X464:L1
XM15A
XM16A
XM15
XM7
XM16
XM7A
1009682.wmf

LEDs

Pos.	Name	Colour	ON	OFF	Notes
464:L1	By-pass active	Red	Plug 464 has been connected in connector X464: B, by-pass position.		
464:L2	Normal	Green	Plug 464 has been connected in connector X464: A, normal position.		

Connectors

Plug	Description
X464:A	Safety chain / well doors normal position.
X464:B	Safety chain / well doors normal position.
XH2	Safety chain / well doors.
XH2A	Safety chain / well doors.
XM7	Car light circuit (Maintenance Access Panel).
XM7A	Car light circuit (LCEADO or LCEADON).
XM15	Emergency light supply (LCECPU).
XM15A	Emergency light supply (Light 19:L).
XM16	Power supply (LCECPU).
XM16A	Power supply (LCEREK / LCEGTWO G02).
XT12B	Safety chain / car from LCEAMAX.